573/4/5.

Prefiled

7 plans

And 574-5

per London Letter

26/11/35.

ST HELENA Sld 31859.
ST MARGARET

"St. Clears."

"N' Kansul Lunitz'

SUNDERLAND RPT. NO. 31928

PLANS TRANSFERRED
TO SISTER VESSEL

W. ~~[illegible]~~

Novely

HR

© 2021
Lloyd's Register
Foundation

S.S. No. 573.

PROFILE.

389'-0" B.P. × 55'-8½" Bdth. Mld. × 25'-4" Dpth. Mld. 2nd. Dk.

COMPLETE SUPERSTRUCTURE TYPE.

CLASS 100 A1. LLOYDS.

SCALE. ⅛" = 1 FOOT.

7/11/35
BKTS. AT No. 17 HATCH END.
3½ × 3½ × ·40
·44
5 FLANGE
TONNAGE BHD. STIFFENER.
TONNAGE BHD. 7
3½ × 3½ · ·40.
BKT. FLANGE CONN. TO GIRDER FLANGE.
HATCH CORNER DIAMONDS UPPER DECK.
3½ × 3½ × ·40.
6 × 6
·44 DIAMOND.
2'0"
2'6"
1'6"
2ND. DECK.
3½ × 3½ × ·44.
·60
To No. 1 hatch
SECTION SHOWING CONN OF ℄ BHD STIFFS. TO TUNNEL TOP & HATCH END.
3'6"
·40 BKT.
3½ × 3½ × ·40 CONN.
6 × 3½ × ·40 LUG
3 RIVETS EACH WAY.
HATCH CORNER DIAMOND PLATES. FRAMES 49-52, 96-99, & 109-112. UPPER DECK.
3½ × 3½ × ·40 ANGLES.
3½" FLANGE
·44 DIAMOND
1'9"
2ND DECK.
RIDER PLATE.
·60 DIAMOND
Nos. 5 & 6 HATCH SIDES SAME AS Nos. 2 & 3.
W.T. OFFICE.
SECTION AT No. 6 HATCH END ON 2ND. DK IN WAY OF W.T. BHD
BHD. BOUNDARY BAR
HATCH SIDE GIRDER FLANGE WELDED TO BULKHEAD.
W.T. BHD IN HATCH.
B.A. STIFF WITH BULB CUT OFF AT TOP FOR CAULKING
SECTION LOOKING AFT.
HATCH
WELDED.
GIRDER WELDED TO BULKHEAD
BHD BOUNDARY ANGLE
BOUNDARY BAR & STIFF. WELDED
CRANK IN BHD
BHD
BA. STIFF
GIRDER LAPPED ON TO BRACKET.
BHD IN HATCH
SECTION SHOWING ℄ BHDS STIFFS. AT HATCH ENDS IN HOLDS
4'0"
HATCH END.
BKT. ·40.
·40 BKT.
TANK TOP.
SECTION SHOWING ℄ BHDS STIFFS. AT HATCH ENDS IN TWEEN DECKS.
2'0"
·36 BKT.
2ND. DK.
No. 1 HATCH SIDES ON UPPER DECK.
12 × 3½ × ·45 B.A.
10" or 11" × 3½ × ·42 B.A.
2 WELDED PLATE STAYS ·40 WITH HOLE FOR PIPE.
·44 COAMING
3½ × 3½ × ·44 COAMING BAR
7½" FLANGE.
·40 TRIPPING BKTS. ON ALTERNATE BEAMS 3 × 3 × ·40 CONNS. INTERMEDIATE BEAM LUGS 3 × 3 × ·40.
Nos. 2 & 3 HATCH SIDES ON UPPER DK
No. 4 HATCH SIDE UPPER DK.
HATCH ENDS UPPER DK.
COAMING ·44
7 × 3 × ·40 BA
HATCH END BEAMS AS SHOWN
No. 7 HATCH SIDE UPPER DECK.
DECKHOUSE.
CHART & WHEELHOUSE.
CAPTAINS HOUSE.
SALOON.
GALLEY.
E.R. SKYLIGHT
BREAKWATER
ANGLE PILLARS.
6 × 3 × ·40 RUNNER BAR
4 × 4 × ·36 ANGLE PILLARS.
FRAMES IN AFTER PEAK
·46 BA OR 10 × 3½ × ·40 B.A. NBS.
KNEES 28½ × ·52.
STRINGERS ON BEAMS 35 × ·34.
SHELL CONN 3½ × 3½ × ·34.
INTERMEDIATE BKTS. 17½ × ·34.
FLANGED STR. WHERE MARKED B.
·30 WASH PLATE
6 × 3 × ·40 PILLARS.
WATER BALLAST.
W.T. TUNNEL
CENTRE LINE BHD ·30. 8 × 3 × ·34 B.A STIFFS TWO FRAME SPACES APART DOUBLE 7 × 3 × ·34 HATCH ENDS.
7 × 3 × ·34 BA BEAMS. KNEES 21 × ·46
GIRDER ON ℄ 10" × ·34 WITH 3 × 3 × ·34 FACE BAR DOUBLE LUG END CONNS.
Plans to be submitted
END FLOORS ·40 FLANGED.
RECESS END
STIFFENERS 2' TO 3'-1½" APART
BACK BAR OVER CROWN OF TUNNEL AT HATCH ENDS.
ENGINE ROOM
ENGINE ROOM AT CENTRE
FEED WATER.
COFFERDAM
OIL FUEL
OIL FUEL OR WATER BALLAST.
PARTIAL FLOORS
CHANGE OF BODY
FRAME SPACING 24"
FRAME SPACING 30"
FRAME SPACING 27"
FRAME SPACING 21"
3/4L
3/5L
1/2L
CENTRE DIVISION.
PEAK FRAMES 7 × 3 × ·38 B.A. TO UPPER DK.
MAIN FRAMES 12 × 3½ × 3½ × ·44 ·50 N.B.S. TO 2ND. DECK.
TWEEN DECK FRAMES 6 × 3½ × ·42 OA. EVERY FRAME, SCARPHED TO MAIN FRAMES
TWEEN DECK FRAMES 6½ × 3½ × ·38 B.A. OR 7 × 3½ × ·34 B.A. NBS. ALTERNATE FRAMES, SCARPHED TO MAIN FRAMES.
+ ·01 on side shell in tween decks or 6 × 3½ × ·37L every
NOTE :- NO CEMENT IN DOUBLE BOTTOM TANKS.
Tween dk frames at F.W. Tanks 6½ × 3½ × ·37L every
MAIN FRAMES 12 × 3½ × 3½ × ·50 ·50 N.B.S. IN WAY OF BOILERS & PERM. BUNKERS TO 2ND. DECK
+ ·01 on side shell in tween decks – frames alt.
MAIN FRAMES 12 × 3½ × 3½ × ·44 ·50 NBS TO 2ND DK.
TWEEN DK FRAMES 6½ × 3½ × ·38 BA OR 7 × 3½ × ·34 BA NBS.
TWEEN DK FRAMES 6½ × 3½ × ·40 B.A. OR 7 × 3½ × ·36 BA NBS.
ON ALTERNATE FRAMES SCARPHED TO MAIN FRAMES.
or 6 × 3 × ·37L every
or 6 × 3 × ·40L every
PANTING FRAMES 12 × 3½ × 3½ × ·44 ·60 NBS TO 2ND DECK
6½ T.S. Bkt 12 × 3½ × 3½ × ·57/·50
4½ T.S. Bkt 12 × 3½ × 3½ × ·59/·60
TWEEN DECK FRAMES 6½ × 3½ × ·38 BA. OR 7 × 3½ × ·34 BA. NBS. ON EVERY FRAME SCARPHED TO MAIN FRAMES.
6 × 3½ × ·44L every
6 × 3½ × ·48L every
PEAK FRAMES 7 × 3 × ·38 B.A TO UPPER DK
END FLOORS ·40 FLANGED.

JOSEPH L. THOMPSON & SONS, LIMITED. SUNDERLAND.
PLAN No. 10384
SHIP No. 573
DATE 30-10-35.

7.11.35

011936-011939-0004

- SUNDERLAND. -

MESSRS. J. L. THOMPSON & SONS

No. "573"/4/5.

DECK PLANS.

LLOYD'S REGISTER OF SHIPPING
SUNDERLAND

Sld 31859 ST HELENA
and
ST MARGARET

Yds 574-5 N/W 'Karsul Heintz'

Per London Letter
27/11/35

St. Clears

SUNDERLAND RPT. No. 31928

PLANS TRANSFERRED
TO SISTER VESSEL

No 576

Noely

© 2021
Lloyd's Register
Foundation

011936-011939-0003

S.S. Nº 573.

DECK PLANS.

389'-0" B.P. × 56'-0" B^DTH. E^XT. × 33'-10" D^PTH. M^LD UPPER D^K.

COMPLETE SUPERSTRUCTURE TYPE WITH FREEBOARD.

LLOYDS 100 A1 CLASS.

& 574 & 575
per London letter
27/11/35

28.11.35

SECTION SHOWING TRANSVERSE UPPER DECK IN WAY OF HATCHES
SECTION BETWEEN HATCHWAYS UPPER DECK
SECTION SHOWING TRANSVERSE AT FRAMES 34 & 127.
MAST HOUSE.
UPPER DECK.
12" × 3½" × 3½" × .38 .50
FL. 2½"
11 - 7/8 RIVETS.
VENT. TRUNK
TRUNK CENTRE PLATE LAPPED ON TO TRANSVERSE.
BKT. WELDED.
MAST
VENT. STRENGTHENED TO SUPPORT TRANSVERSE.
BULWARK.
SECTION SHOWING HATCH END TRANSVERSE
UPPER DECK
BRACKETS TO LONG^LS & HATCH END TRANSVERSE
BRACKET TO LONGITUDINALS & HE TRANS & CONNECTION TO BEAM TRANS
UPPER D^K. SECTION CLEAR OF HATCHWAYS
UPPER DECK
STRINGER BAR
WOOD SHEATHING
BKTS. TO TRANS. AT CASING SIDES.
.40" BKT. 3" × 3" × .40"
ENGINE ROOM.
TIE BEAM
SCREEN BHD.
DOUBLE 3½ × 3½ × .36
BOILER ROOM.
SCREEN BHD.
HATCH 27'-6" × 25'-0
HATCH 25'-0 × 25'-0
HATCH 12'-0" × 25'-0
1 WEB TABLE B.
19" × .38" 4 ANGLES 6" × 3½" × .46"
2⅜" COVERS.
UPPER DECK LONG^LS. CLEAR OF HATCHES 5½" × 3" × .34" B.A. 2'-9" APART.
IN LINE 5½" × 3" × .30" B.A. 2'-6"
2ND. CLEAR 7" × 3" × .34" B.A. N.B.S.
IN LINE 7" × 3" × .34" B.A. N.B.S.
NOTE:- POSITIONS OF BUTTS ARE APPROXIMATE.
FRAMES 122 - 133
CASING STIFF.
TIE BEAM.
BKT. TO TIE BEAM & CASING SIDE.
FRAME SPACING 30"
FRAME SPACING 27"
FRAME SPACING 21"
FRAME SPACING 24"
2ND. DECK
WEB FRAMES ON NOS. 74 & 80
FRAMES CUT IN WAY OF TANKS
W.T. BHD. BELOW.
NON W.T. BHD. BELOW.
FRESH WATER TANKS
HATCH
2ND. DECK LONGITUDINAL SECTION AT HATCH SIDES
WEBS AND COVERS INCREASED FOR HIGH TWEEN DECKS
SECTION SHOWING HATCH END TRANSVERSE 2ND. DECK
BRACKETS TO LONG^LS & HATCH END TRANSVERSE
SECTION SHOWING TRANSVERSE ON 2ND. D^K. IN WAY OF HATCHES
SECTION IN WAY OF BHDS.
SECTION BETWEEN HATCHWAYS 2ND. D^K.
BRACKETS TO 2ND. D^K. HATCH SIDES
WELDED
3½ × 3½ × .40 SPACED 5'-0" APART.
WEB FRAMES 74 & 80
SECTION CLEAR OF HATCHWAYS 2ND. DECK
BUTS TO LONG^L & BHD. STIFFS
3RD. STRINGER BELOW 2ND. DECK
2ND. STRINGER BELOW 2ND. DECK.
1ST. STRINGER BELOW 2ND. DECK.
SHELL MIDSHIP THICKNESS
B.A. STRINGER 10" × 3½" × .44"
INSIDE OF FRAMES.
3½" × 3½" × .40" LUGS ON FRAMES
WITH 4 RIVET CONNECTION TO STRINGER.
(SEE SEPARATE PLAN).
FORWARD OF COLLISION BULKHEAD
STRINGER 35" × .34"
BEAMS 9" × 3½" × .44" B.A. KNEES
AT 42" SPACING
17½" × .34" BRACKET WHERE MARKED B.
FLANGED TO STRINGER
STRINGER TO SHELL 5" × 5" × .34"
CHAIN LOCKER
CHAIN LOCKER BOTTOM .44
30" WASHPLATE
27" FRAME SPACING
21" FRAME SPACING.

⊗ bracing stiffeners to be fitted in way of transverse beams & of increased size

JOSEPH L. THOMPSON & SONS, LIMITED
SUNDERLAND
PLAN Nº 10425.
SHIP Nº 573.
DATE 20.11.35.

28.11.35

573/4/5.

Tank top
Longitudinal framing

× Double Bottom with Long
7 plan
framing

and 574-5
per London Letter
27/11/35

ST HELENA Sld 31859
ST MARGARET

"St. Clears"

SUNDERLAND RPT. No. 31928

PLANS TRANSFERRED
TO SISTER VESSEL

~~W.S 110~~

Novelty

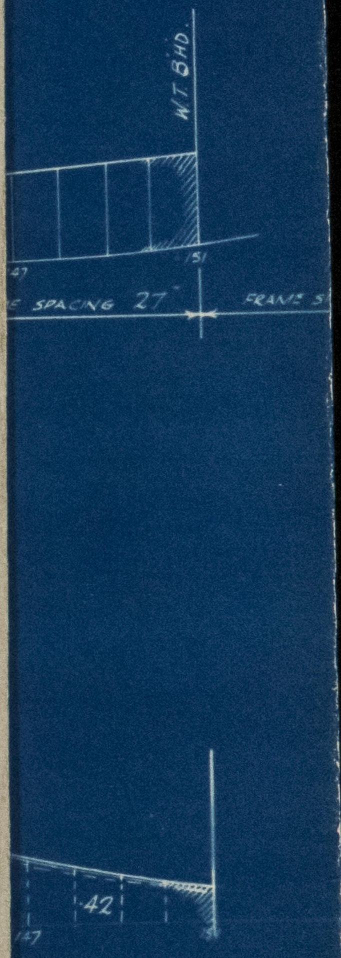
W.T. BHD.
147
151
SPACING 27"
FRAME S
42
147

011936-011939.0005

© 20
Lloyd's Register
Foundation

7/11/35

S.S. Nº 573.

PLAN SHOWING ALTERNATIVE ARRANGEMENT OF DOUBLE BOTTOM WITH LONGITUDINAL FRAMING.

SCALE. 1/8" = 1 FOOT.

SEE SEPARATE PLAN FOR SIZES OF LONGITUDINALS, BRACKETS ETC.

FULL DEPTH GIRDER 5'-0" FROM ℄.

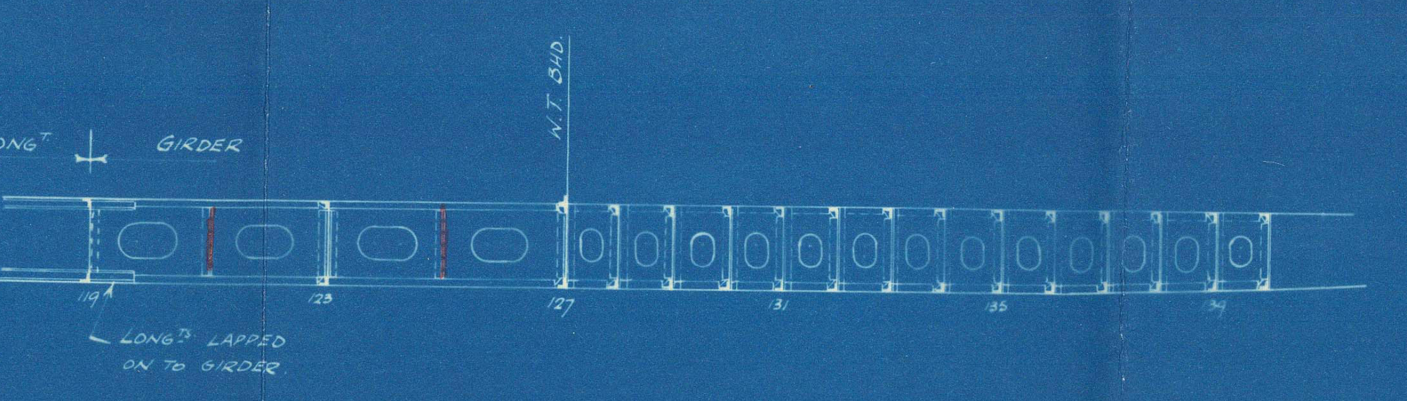

LONGᵀ
GIRDER
W.T. BHD.
119
123
127
131
135
139
LONGᵀˢ LAPPED ON TO GIRDER.

RECESS END.
W.T. BHD.
FRAME SPACING 30"
3/5 L
1/2 L
W.T. BHD. AT CENTRE
WEB FRAME
NON W.T. STEEL BHD.
FRAME SPACING 30"
FRAME SPACING 27"
FRAME SPACING 27"
FRAME SPACING 21"
TANK SIDE BRACKETS
TANK TOP & SHELL CONN. CONTINUOUS TO LONGITUDINAL
COFFERDAM
W.T. BHD.
FULL DEPTH GIRDER.
FULL DEPTH GIRDER.
SHELL & TANK TOP LONGITUDᴸ
HALF DEPTH GIRDER.
SOLID FLOORS
TRANSVERSE FRAMING.
LONGITUDINAL FRAMING.
CHANGE OF BODY.
LONGITUDINAL FRAMING
TRANSVERSE FRAMING.
BUTTS OF LONGITUDINALS WITH BACKSTRAPS.
12"
12"

Unattached at ends between diaphragms in cofferdams
Stiffening angles in line with longitudinals
4 – 3½ – 40 L with 6" L longtdls
5 – 3½ – 48 L " 10" L "

All shell angles double at solid floors

JOSEPH L. THOMPSON & SONS. LIMITED. SUNDERLAND.
PLAN Nº 10389
SHIP Nº 573
DATE 30.10.35

7.11.35

011936-011939-0005

573/4/5.

(1) Section

7 plans.

and 574 & 5

per London Litho

27/11/35.

ST HELENA Sld. 31859.

ST MARGARET

"St. Clears."

w/w 'Konsul Hintz'

SUNDERLAND RPT. No. 31928

PLANS TRANSFERRED
TO SISTER VESSEL

Lorely

~~14-8-48~~

© 2021
Lloyd's Register
Foundation

011936-011939-0002

MIDSHIP SECTION.

S.S. Nº 573.

COMPLETE SUPERSTRUCTURE TYPE.
LLOYDS 100A.1. CLASS.
scale ½" = 1 Foot.

with a freeboard corresponding to a C.S.S. vessel having a tonnage opening

7/11/35

PRINCIPAL DIMENSIONS.

LENGTH B.P.	389'-0"
BREADTH EX.	56'-0"
" MLD.	55'-8½"
DEPTH MLD. UPPER DK.	33'-10"
" " 2ND DK.	25'-4"
DEPTHS TO LENGTH	11·5

NUMERALS.

L×D = 389 (25·33+8·0) = 389×33·33 = 12965
L(B+D) = 389 (55·71+33·33) = 34636.

EQUIPMENT NUMERALS.

L(B+D.)	389 (55·71+33·83) =	34831.
CASING	69·5×7·75×·5 =	269
DECK HOUSE	62·0×7·5×·5 =	232
	EQUIPMENT Nº.	35332

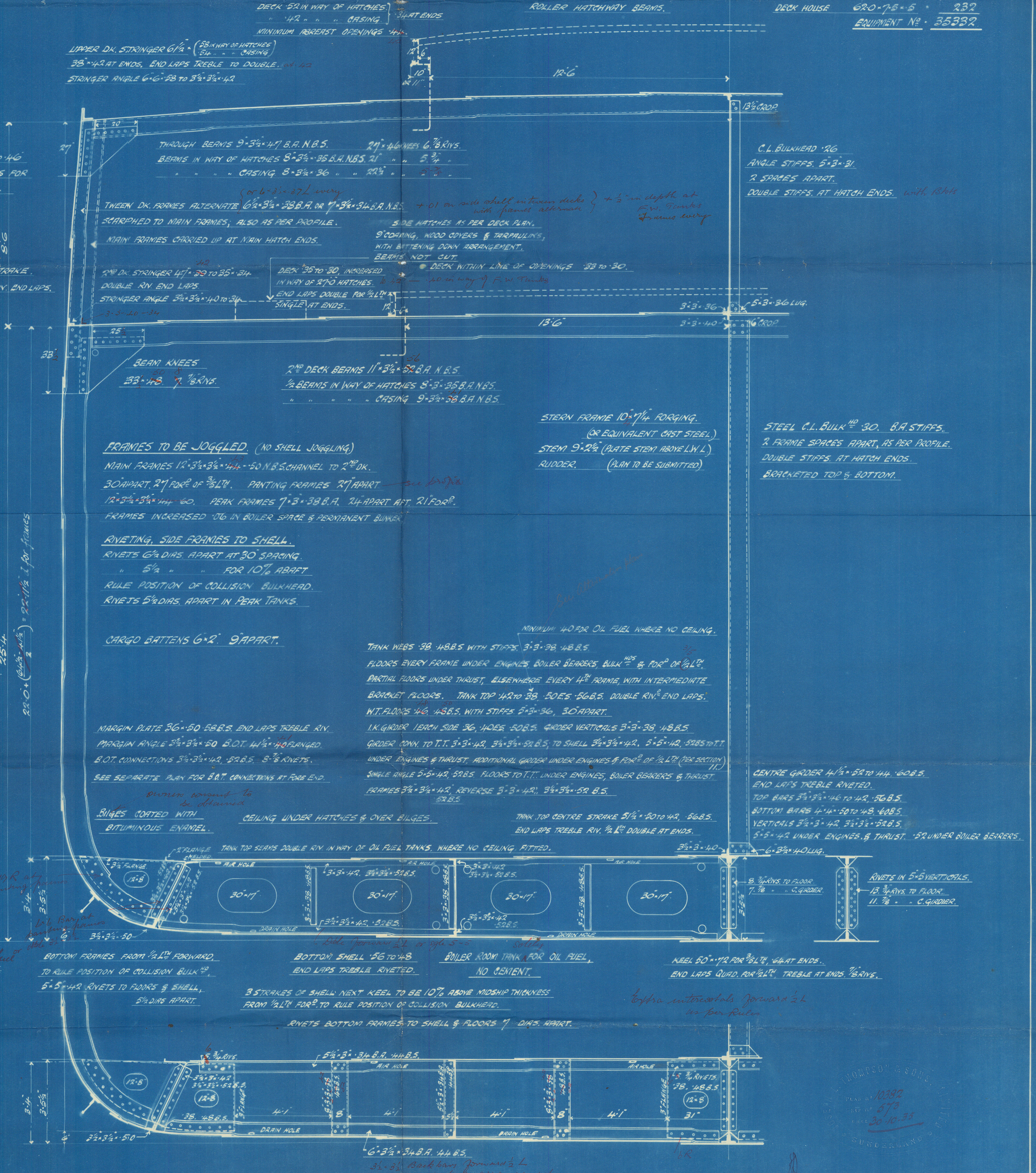

ROLLER HATCHWAY BEAMS.
12'·6"
12"
6"
10"
or 11"
13½" CROP.
20"
27"
8'·6"
25½"
33½"
13'·6"
3×3×·36
5×3×·36 LUG.
3×3×·40
6" CROP.
3·3·40 – ·34
12"
6"
25'·4"
22'·0" + ((64½" – 41½")/2) = ~~22·11½~~ d for frames
3'·4"
3'·5½"
6"
3½"×3½"×·50
3½" FLANGE.
2" FLANGE WELDED.
12"×8"
30"×17"
AIR HOLE
DRAIN HOLE
3"×3"×·42. 3½"×3½"×·52 B.S.
3½"×3½"×·42. ·52 B.S.
3"×3"×·38. ·48 B.S.
3½"×3"×·40
6×3½"×·40 LUG.
3'·5¼"
8. ¾" RIVS. TO FLOOR.
7. ⅞ " " C. GIRDER.
RIVETS IN 5"×5" VERTICALS.
13. ¾" RIVS. TO FLOOR.
11. ⅞ " " C. GIRDER.
19 R at panting frames
L 6 Bar at panting frames or dble 3½ & 3½
6 ¾" RIVS.
5½"×3"×·34 B.A. ·44 B.S.
3½"×3"×·42
3½"×3½"×·52 B.S.
3" FLANGE
38. ·48 B.S.
4'·1"
8"
5½"
31"
5. ¾" RIVETS.
·38. ·48 B.S.
6"×3½"×·34 B.A. ·44 B.S.
6R

DECK ·52 IN WAY OF HATCHES } ·34 AT ENDS
" ·42 " " " CASING }
MINIMUM ABREAST OPENINGS ~~·44~~ ·45

UPPER DK. STRINGER 6½" × (·58 IN WAY OF HATCHES / ·54 " " " CASING)
38"×·42 AT ENDS. END LAPS TREBLE TO DOUBLE. at ·42
STRINGER ANGLE 6"×6"×·58 TO 3½"×3½"×·42

SHEERSTRAKE 69"×·65 TO ·46
QUAD. RIVETED END LAPS FOR ½ LTH TREBLE AT ENDS.

THROUGH BEAMS 9"×3½"×·47 B.A. N.B.S. 27"×·46 KNEES 6. ⅞ RIVS.
BEAMS IN WAY OF HATCHES 8"×3½"×·35 B.A. N.B.S. 21" " " 5. ¾ "
" " " CASING 8×3½×·36 " " 22½" " " 5 ⅞ "

TWEEN DK. FRAMES ALTERNATE {6½×3½×·38 B.A. OR 7×3½×·34 B.A. N.B.S. (or 6×3½×·37 L every) + ·01 on side shell in tween decks with frames alternate } + ½" in depth at F.W. Tanks Frames every
SCARPHED TO MAIN FRAMES; ALSO AS PER PROFILE.
MAIN FRAMES CARRIED UP AT MAIN HATCH ENDS.

SIDE HATCHES AS PER DECK PLAN.
9" COAMING, WOOD COVERS & TARPAULINS,
WITH BATTENING DOWN ARRANGEMENT.
BEAMS NOT CUT.
DECK WITHIN LINE OF OPENINGS ·33 TO ·30.
·40 in way of F.W. Tanks

STRAKE BELOW SHEERSTRAKE.
75×·60 TO ·46. TREBLE RIV. END LAPS.

2ND DK. STRINGER 47"×~~·39~~ ·42 TO 35"×·34
DOUBLE RIV. END LAPS.
STRINGER ANGLE 3½×3½×·40 TO ·34

DECK ·35 TO ·30, INCREASED IN WAY OF 27'·0" HATCHES. to ·42
END LAPS DOUBLE FOR ½ LTH SINGLE AT ENDS.

C.L. BULKHEAD ·26
ANGLE STIFFS. 5"×3"×·31.
2 SPACES APART.
DOUBLE STIFFS. AT HATCH ENDS. with Bkts

BEAM KNEES
33½"×~~·48~~ ·50 ~~7~~ 8 ⅞" RIVS.

2ND DECK BEAMS 11"×3½"×~~·52~~ ·56 B.A. N.B.S.
½ BEAMS IN WAY OF HATCHES 8"×3"×·35 B.A. N.B.S.
" " " " " CASING 9×3½×~~·38~~ ·41 B.A. N.B.S.

STERN FRAME 10"×7¼" FORGING.
(OR EQUIVALENT CAST STEEL.)
STEM 9"×2½" (PLATE STEM ABOVE L.W.L.)
RUDDER. (PLAN TO BE SUBMITTED)

STEEL C.L. BULKHD ·30. B.A. STIFFS.
2 FRAME SPACES APART, AS PER PROFILE.
DOUBLE STIFFS. AT HATCH ENDS.
BRACKETED TOP & BOTTOM.

FRAMES TO BE JOGGLED. (NO SHELL JOGGLING)
MAIN FRAMES 12"×3½"×3½"×~~·44~~ ·43 – ·50 N.B.S. CHANNEL TO 2ND DK.
30" APART. 27" FORD OF ⅗ LTH. PANTING FRAMES 27" APART – see profile
~~12×3½×3½×·44~~ ·60. PEAK FRAMES 7"×3"×·38 B.A. 24" APART AFT. 21" FORD.
FRAMES INCREASED ·06 IN BOILER SPACE & PERMANENT BUNKER.

RIVETING, SIDE FRAMES TO SHELL.
RIVETS 6½ DIAS. APART AT 30" SPACING.
" 5½ " " FOR 10% ABAFT
RULE POSITION OF COLLISION BULKHEAD.
RIVETS 5½ DIAS. APART IN PEAK TANKS.

CARGO BATTENS 6"×2". 9" APART.

See alteration plan

SIDE SHELL ·56 TO ·46
END LAPS TREBLE RIVETED.
SHELL MIDSHIP THICKNESS, IN WAY OF PANTING, AFT OF COLLISION BHD.
FOR A DISTANCE EQUAL TO 10% OF LENGTH OF VESSEL.
ALSO FORWARD TO STEM, BETWEEN LIGHT & LOAD LINES. (PER OWNERS)
PROPELLER BOSS PLATES ·64

MINIMUM ·40 FOR OIL FUEL WHERE NO CEILING.
TANK WEBS ·38. ·48 B.S. WITH STIFFS. 3"×3"×·38. ·48 B.S.
FLOORS EVERY FRAME UNDER ENGINES, BOILER BEARERS, BULKHDS & FORD OF ½ (⅗) LTH.
PARTIAL FLOORS UNDER THRUST, ELSEWHERE EVERY 4TH FRAME, WITH INTERMEDIATE BRACKET FLOORS. TANK TOP ·42 TO ·38, ·50 E.S. ·56 B.S. DOUBLE RIVD END LAPS.
W.T. FLOORS ~~·46~~ ·48. ~~·48~~ ·50 B.S. WITH STIFFS. 5"×3"×·36, 30" APART.
I.K. GIRDER 1 EACH SIDE ·36, ·40 E.S. ·50 B.S. GIRDER VERTICALS 3"×3"×·38. ·48 B.S.
GIRDER CONN. TO T.T. 3×3"×·42, 3½"×3½"×·52 B.S.; TO SHELL 3½"×3½"×·42. 5"×5"×·42, ·52 B.S. TO T.T.
UNDER ENGINES & THRUST. ADDITIONAL GIRDER UNDER ENGINES & FORD OF ½ LTH (PER SECTION 11.)
SINGLE ANGLE 5×5×·42, ·52 B.S. FLOORS TO T.T. UNDER ENGINES, BOILER BEARERS & THRUST.
FRAMES 3½"×3½"×·42, REVERSE 3"×3"×·42, ·52 B.S. 3½"×3½"×·52 B.S.

MARGIN PLATE 36"×·50 ·58 B.S. END LAPS TREBLE RIV.
MARGIN ANGLE 3½×3½×·50 B.O.T. 41½"×~~·40~~ ·41 FLANGED.
B.O.T. CONNECTIONS 3½×3½×·42, ·52 B.S. 8-⅞ RIVETS.
SEE SEPARATE PLAN FOR B.O.T. CONNECTIONS AT FORE END.

BILGES COATED WITH BITUMINOUS ENAMEL. owners consent to be obtained

CEILING UNDER HATCHES & OVER BILGES.

TANK TOP CENTRE STRAKE 51½"×·50 TO ·42, ·56 B.S.
END LAPS TREBLE RIV. ½ LTH DOUBLE AT ENDS.

CENTRE GIRDER 41½"×·52 TO ·44. ·60 B.S.
END LAPS TREBLE RIVETED.
TOP BARS 3½"×3½"×·46 TO ·42, ·56 B.S.
BOTTOM BARS 4"×4"×·50 TO ·48, ·60 B.S.
VERTICALS 3½"×3"×·42, 3½"×3½"×·52 B.S.
5"×5"×·42 UNDER ENGINES & THRUST. ·52 UNDER BOILER BEARERS.

TANK TOP SEAMS DOUBLE RIV. IN WAY OF OIL FUEL TANKS, WHERE NO CEILING FITTED.

BOTTOM FRAMES FROM ½ LTH FORWARD, TO RULE POSITION OF COLLISION BULKHD, 5"×5"×·42 RIVETS TO FLOORS & SHELL, 5½ DIAS APART.

Dble forward ½ L or sgle 5×5

BOTTOM SHELL ·56 TO ·48
END LAPS TREBLE RIVETED.

BOILER ROOM TANK solely FOR OIL FUEL,
NO CEMENT.

KEEL 50"×·72 FOR ⅗ LTH, ·64 AT ENDS.
END LAPS QUAD. FOR ½ LTH, TREBLE AT ENDS. ⅞" RIVS.

3 STRAKES OF SHELL NEXT KEEL TO BE 10% ABOVE MIDSHIP THICKNESS FROM ½ LTH FORD. TO RULE POSITION OF COLLISION BULKHEAD.

Extra intercostals forward ½ L as per Rules

RIVETS BOTTOM FRAMES TO SHELL & FLOORS 7 DIAS. APART.

3½×3½ Backbars forward ½ L or equivalent arrangement

SKETCH OF TANK GUSSET.

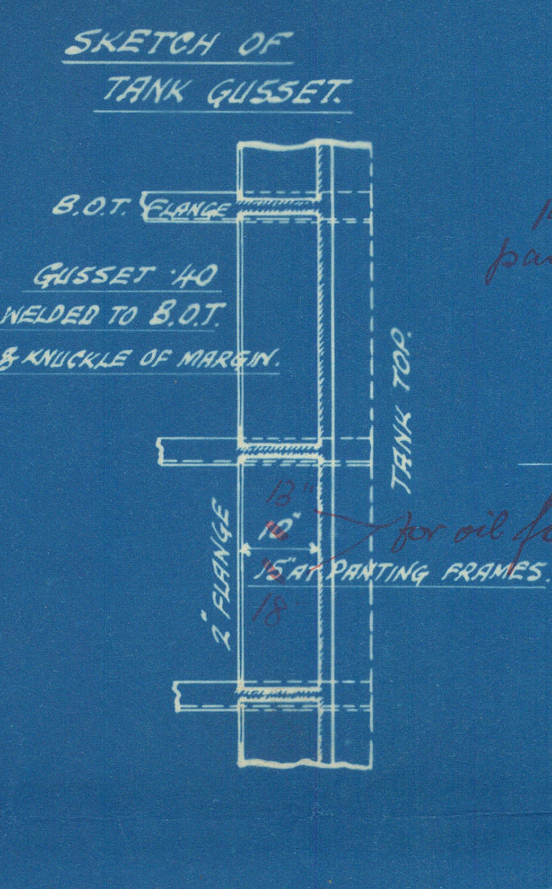

B.O.T. FLANGE
GUSSET ·40 WELDED TO B.O.T. & KNUCKLE OF MARGIN.
TANK TOP.
2" FLANGE
13"
10"
15" AT PANTING FRAMES.
18
for oil fuel

JOSEPH L. THOMPSON & SONS. LIMITED. SUNDERLAND
PLAN Nº 10382
SHIP Nº 573
DATE 30.10.35

7.11.35

011936-011939-0002

— SUNDERLAND. —

MESSRS. J. L. THOMPSON & SONS.

NO. 573./4/5.

ALTERNATIVE STERN FRAME
AND
BALANCED REACTION RUDDER.

and 574-5
Per London Letter
27/11/38

ST ~~HELENA~~ Sld. 31859
ST MARGARET

St. Clears

SUNDERLAND RPT. NO. 31928

PLANS TRANSFERRED
TO SISTER VESSEL

~~Wattle~~

Noreg

© 2021
Lloyd's Register
Foundation

011936-011939-0006

22.11.35.

ALTERNATIVE

S.S. No 573

BALANCED REACTION RUDDER

SCALE:- 1/2" = 1 FT.

FORGED STEEL POST.

& FORGED ARMS.

SPEED 10¼ KNOTS.

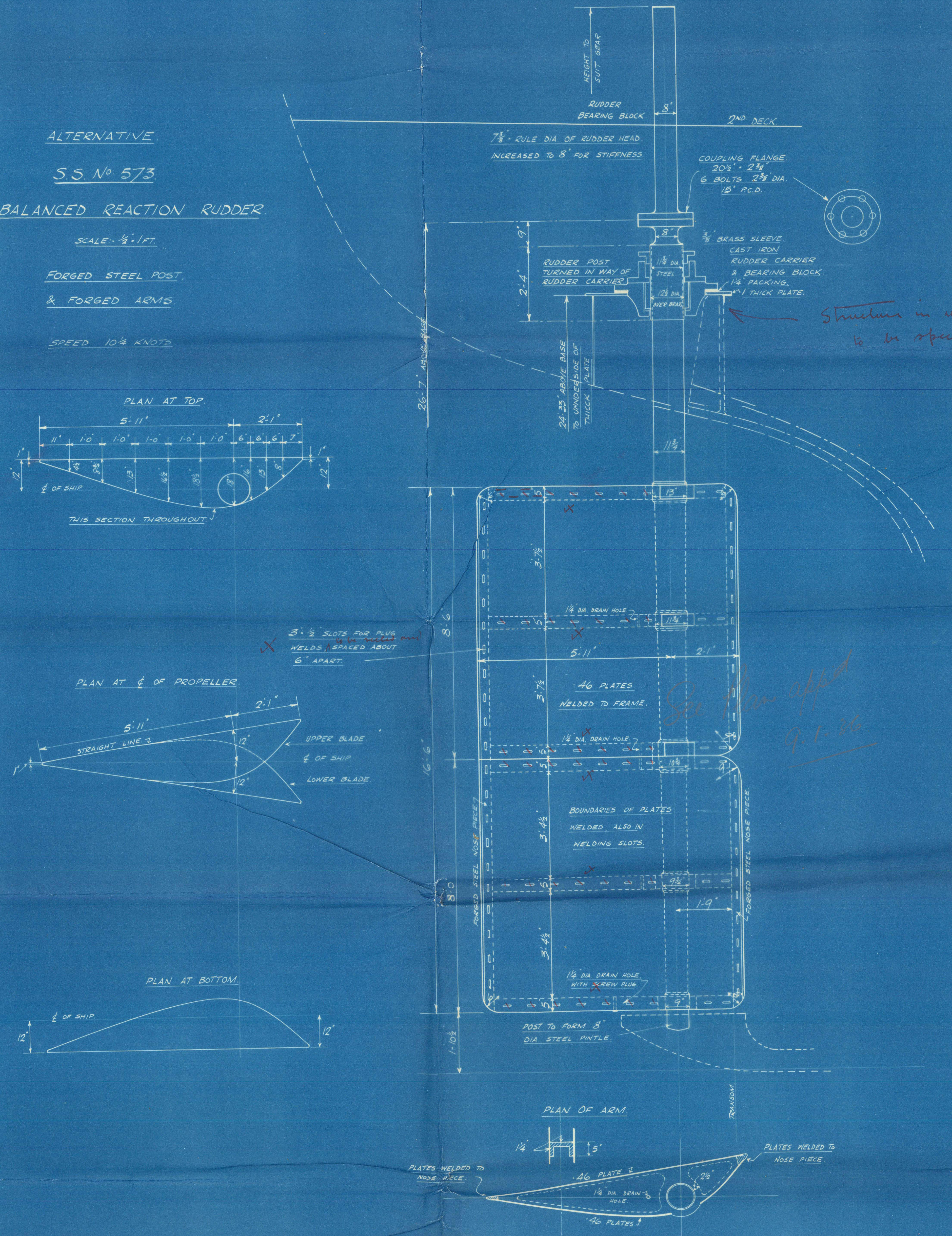
HEIGHT TO SUIT GEAR
RUDDER BEARING BLOCK
8"
2ND DECK
7⅜" RULE DIA. OF RUDDER HEAD. INCREASED TO 8" FOR STIFFNESS.
COUPLING FLANGE. 20½" × 2⅜" 6 BOLTS 2⅜" DIA. 15" P.C.D.
⅜" BRASS SLEEVE. CAST IRON RUDDER CARRIER & BEARING BLOCK.
1¼" PACKING.
1" THICK PLATE.
RUDDER POST TURNED IN WAY OF RUDDER CARRIER.
11¾" DIA. STEEL
12½" DIA. OVER BRASS
9"
2'-4"
26'-7" ABOVE BASE
24'-2⅝" ABOVE BASE TO UNDERSIDE OF THICK PLATE
11¾"
PLAN AT TOP.
5'-11"
2'-1"
11" 1'-0" 1'-0" 1'-0" 1'-0" 1'-0" 6" 6" 6" 7"
1"
12"
4½" 8¾" 13" 16½" 18½" 18" 16" 13" 8"
℄ OF SHIP.
THIS SECTION THROUGHOUT.
13"
3'-7½"
1¼" DIA. DRAIN HOLE.
11¾"
3"-½" SLOTS FOR PLUG WELDS SPACED ABOUT 6" APART.
8'-6"
5'-11"
2'-1"
.46 PLATES WELDED TO FRAME.
10¾"
16'-6"
BOUNDARIES OF PLATES WELDED ALSO IN WELDING SLOTS.
3'-4½"
FORGED STEEL NOSE PIECE
8'-0"
9¾"
1'-9"
1¼" DIA. DRAIN HOLE, WITH SCREW PLUG.
9"
POST TO FORM 8" DIA. STEEL PINTLE.
1'-10½"
TRANSOM.
PLAN AT ℄ OF PROPELLER.
5'-11"
2'-1"
STRAIGHT LINE.
UPPER BLADE.
℄ OF SHIP.
LOWER BLADE.
12"
1"
PLAN AT BOTTOM.
℄ OF SHIP.
12"
PLAN OF ARM.
1¼"
5"
PLATES WELDED TO NOSE PIECE.
.46 PLATE.
1¼" DIA. DRAIN HOLE.
2½"
.46 PLATES

Structure in way of bearing to be specially strengthened

to be welded and

See Plan appd 9.1.36

TO LLOYDS CLASSIFICATION.

ALTERNATIVE.

S.S. No 573.

CAST STEEL STERN FRAME.

SCALE:- 1/2" = 1 FT.

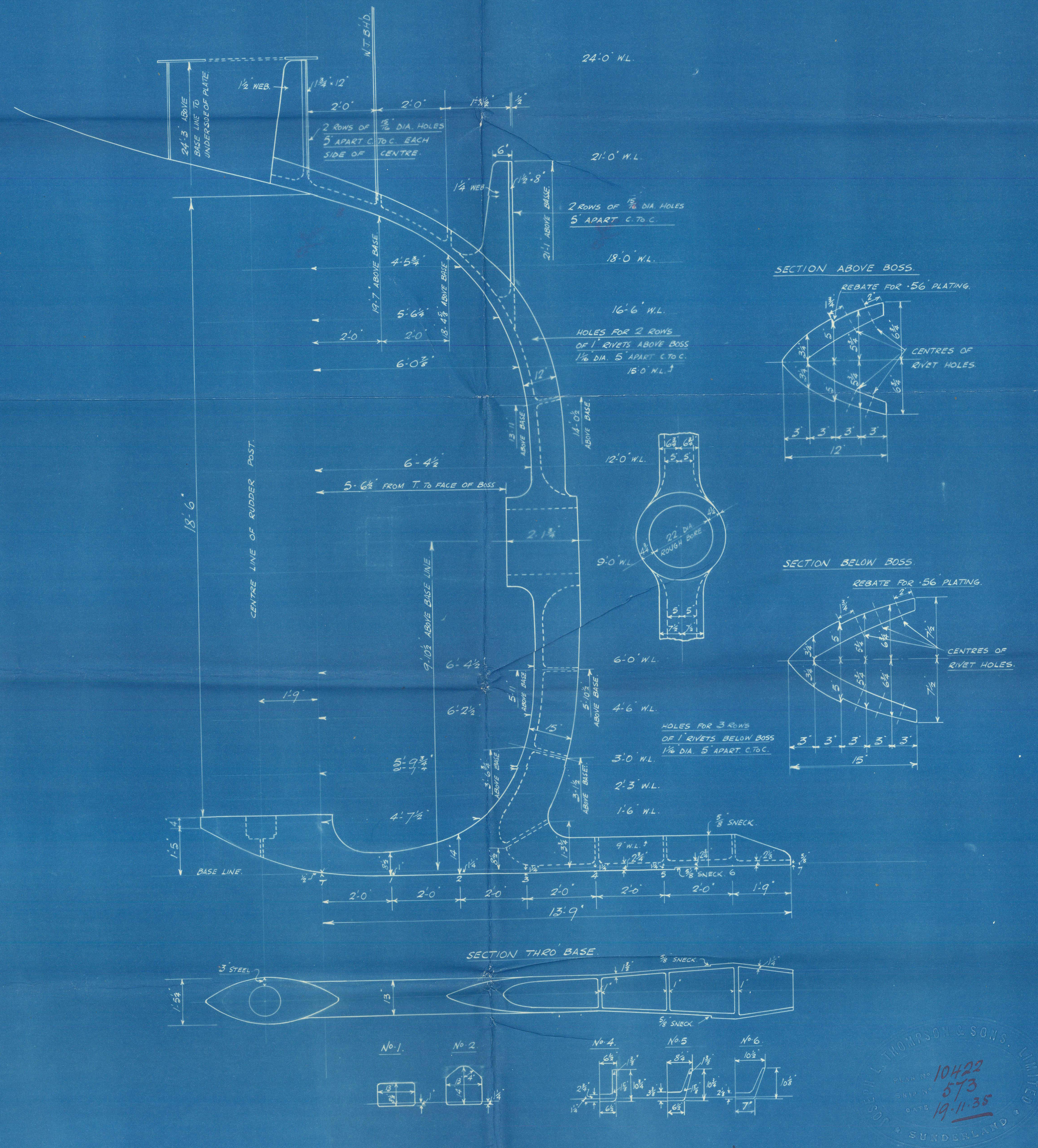
W.T. BHD.
24'-0" W.L.
1½" WEB.
1¾" × 12"
24'-3" ABOVE BASE LINE TO UNDERSIDE OF PLATE.
2'-0"
2'-0"
1'-4½"
½"
2 ROWS OF 15/16" DIA. HOLES 5" APART C. TO C. EACH SIDE OF CENTRE.
6"
21'-0" W.L.
1¼" WEB
1½" × 8"
21'-1" ABOVE BASE.
2 ROWS OF 15/16" DIA. HOLES 5" APART C. TO C.
18'-0" W.L.
19'-7" ABOVE BASE.
4'-5¾"
18'-4⅝" ABOVE BASE
5'-6¼"
16'-6" W.L.
2'-0"
2'-0"
6'-0⅞"
HOLES FOR 2 ROWS OF 1" RIVETS ABOVE BOSS 1/16" DIA. 5" APART C. TO C.
15'-0" W.L.
12"
13'-11" ABOVE BASE
14'-0½" ABOVE BASE
12'-0" W.L.
6'-4½"
5'-6½" FROM T. TO FACE OF BOSS
18'-6"
CENTRE LINE OF RUDDER POST.
2'-1¾"
9'-0" W.L.
22" DIA. ROUGH BORE
9'-10½" ABOVE BASE LINE
6'-0" W.L.
6'-4½"
1'-9"
5'-11" ABOVE BASE.
5'-10½" ABOVE BASE
4'-6" W.L.
6'-2½"
15"
HOLES FOR 3 ROWS OF 1" RIVETS BELOW BOSS 1/16" DIA. 5" APART C. TO C.
5'-9¾"
3'-6¾" ABOVE BASE
3'-1½" ABOVE BASE.
3'-0" W.L.
2'-3" W.L.
1'-6" W.L.
4'-7½"
⅝" SNECK.
9" W.L.
1'-5"
BASE LINE.
1 2 3 4 5 6 7
2'-0" 2'-0" 2'-0" 2'-0" 2'-0" 2'-0" 1'-9"
13'-9"
SECTION ABOVE BOSS.
REBATE FOR .56" PLATING.
CENTRES OF RIVET HOLES.
3" 3" 3" 3"
12"
SECTION BELOW BOSS.
REBATE FOR .56" PLATING.
CENTRES OF RIVET HOLES.
3" 3" 3" 3" 3"
15"
SECTION THRO' BASE.
3" STEEL.
1'-5¼"
13"
⅝" SNECK.
No. 1.
No. 2.
No. 4.
No. 5.
No. 6.

JOSEPH L. THOMPSON & SONS, LIMITED.
SUNDERLAND
PLAN No 10422
SHIP No 573
DATE 19.11.35

27.11.35

LONDON COPY.

RIGHT HAND HEADERS

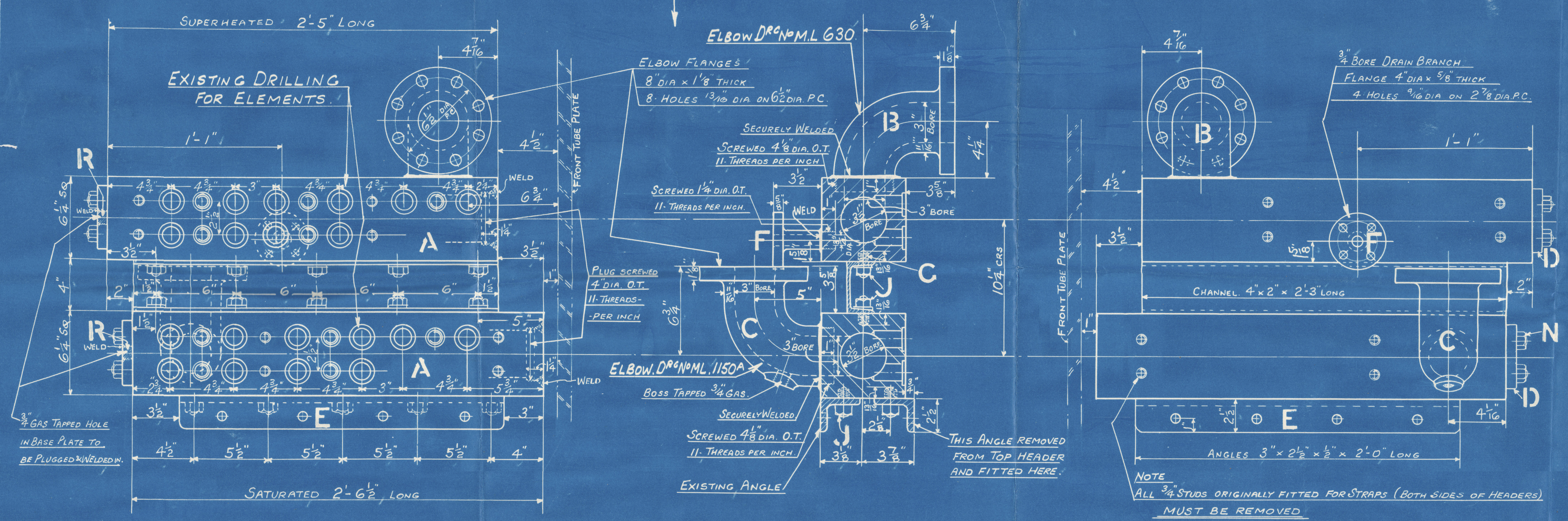
SUPERHEATED 2'-5" LONG
EXISTING DRILLING FOR ELEMENTS
ELBOW FLANGES 8" DIA × 1 1/8" THICK 8 - HOLES 13/16 DIA ON 6 1/2" DIA P.C.
ELBOW DRG NO M.L 630
SECURELY WELDED
SCREWED 4 1/8" DIA. O.T. 11. THREADS PER INCH
SCREWED 1 1/4" DIA. O.T. 11. THREADS PER INCH.
3" BORE
PLUG SCREWED 4" DIA. O.T. 11. THREADS PER INCH
ELBOW. DRG NO ML. 1150A
BOSS TAPPED 3/4" GAS.
SECURELY WELDED
SCREWED 4 1/8 DIA. O.T. 11. THREADS PER INCH
EXISTING ANGLE
THIS ANGLE REMOVED FROM TOP HEADER AND FITTED HERE.
3/4" GAS TAPPED HOLE IN BASE PLATE TO BE PLUGGED & WELDED IN.
SATURATED 2'-6 1/2" LONG
FRONT TUBE PLATE
WELD
A
B
C
D
E
F
J
N
R
3/4" BORE DRAIN BRANCH FLANGE 4" DIA × 5/8" THICK 4 HOLES 9/16 DIA ON 2 7/8" DIA P.C.
CHANNEL 4" × 2" × 2'-3" LONG
ANGLES 3" × 2 1/2" × 1/2" × 2'-0" LONG
10 1/4" CRS
1'-1"

NOTE
ALL 3/4" STUDS ORIGINALLY FITTED FOR STRAPS (BOTH SIDES OF HEADERS) MUST BE REMOVED

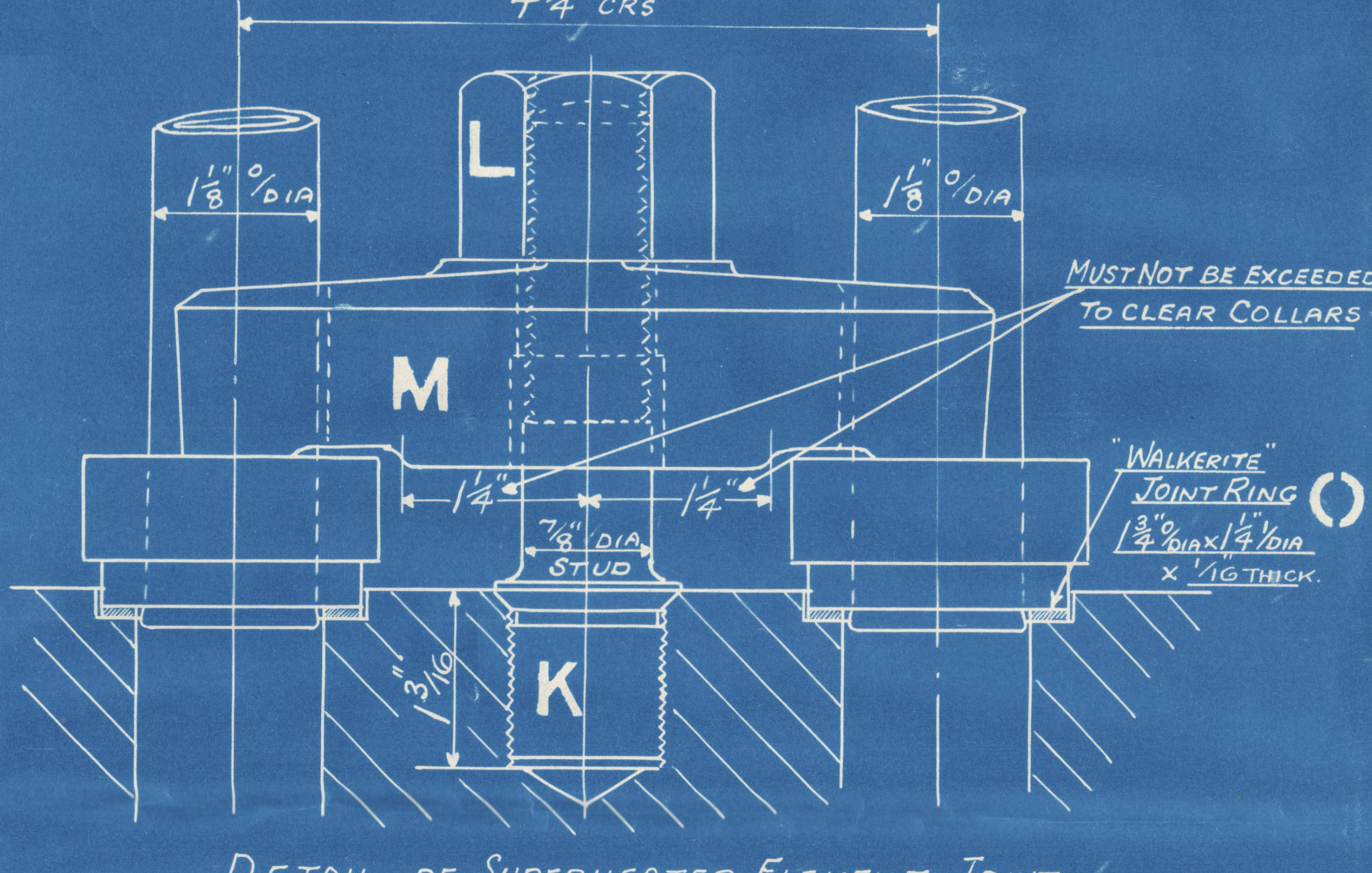
4 3/4" CRS
L
M
K
1 1/8" O/DIA
MUST NOT BE EXCEEDED TO CLEAR COLLARS
1 1/4"
7/8" DIA STUD
1 3/16"
"WALKERITE" JOINT RING O
1 3/4" O/DIA × 1 1/4" I/DIA × 1/16" THICK.

DETAIL OF SUPERHEATER ELEMENT JOINT.

SCALE. FULL SIZE.

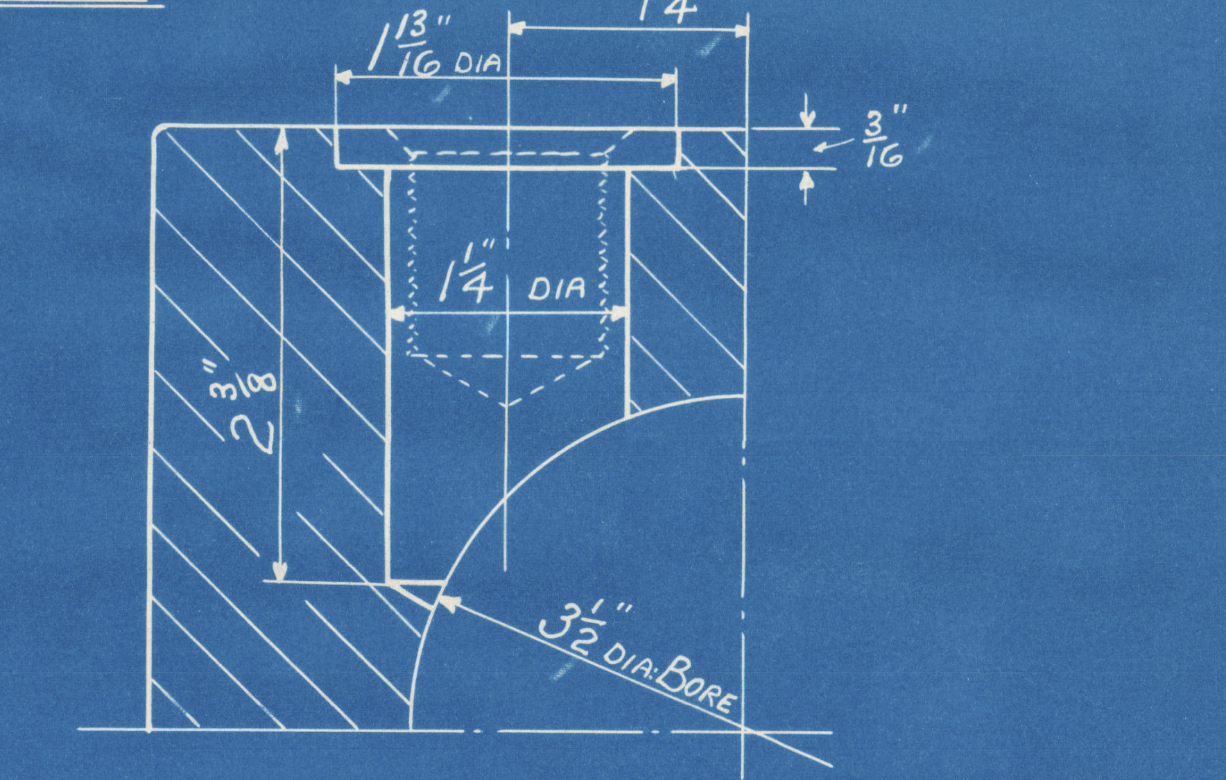
1 13/16" DIA
1 1/4"
3/16"
1 1/4" DIA
2 5/16"
3 1/2" DIA. BORE

DETAIL OF DRILLING FOR ELEMENT HOLES.

LEFT HAND HEADERS

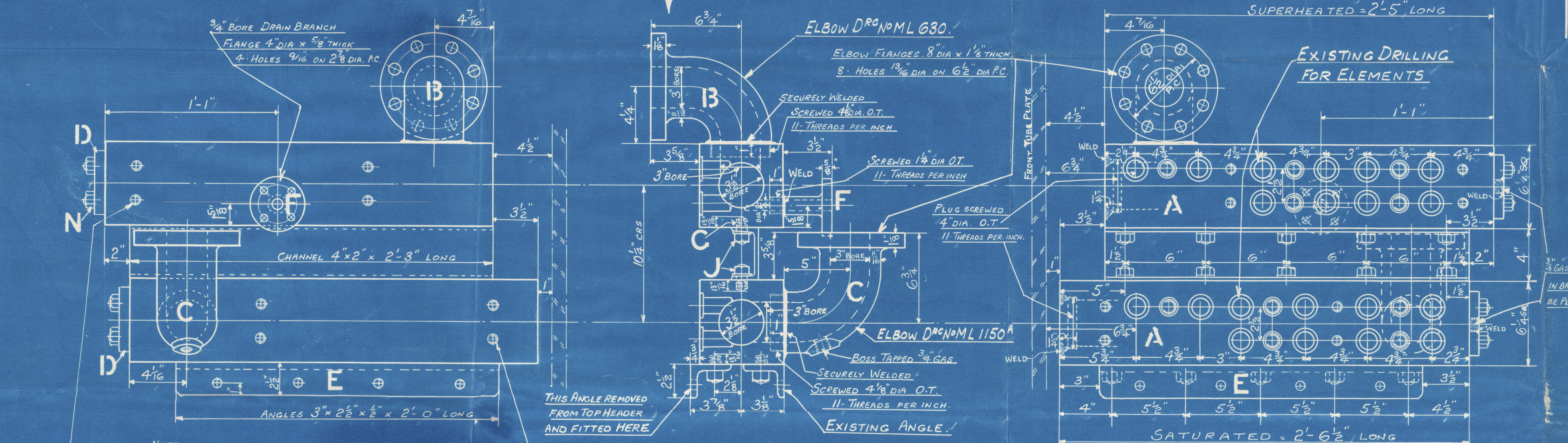
3/4" BORE DRAIN BRANCH FLANGE 4" DIA × 5/8" THICK 4 - HOLES 9/16 ON 2 7/8" DIA. P.C.
ELBOW DRG NO M L 630.
ELBOW FLANGES. 8" DIA × 1 1/8" THICK. 8 - HOLES 13/16 DIA ON 6 1/2" DIA P.C.
SECURELY WELDED
SCREWED 4 1/8" DIA. O.T. 11 - THREADS PER INCH
SCREWED 1 1/4" DIA O.T. 11 - THREADS PER INCH
PLUG SCREWED 4" DIA. O.T. 11 THREADS PER INCH.
SUPERHEATED = 2'-5" LONG
EXISTING DRILLING FOR ELEMENTS
FRONT TUBE PLATE
CHANNEL 4" × 2" × 2'-3" LONG
ELBOW DRG NO M L 1150A
BOSS TAPPED 3/4" GAS
SECURELY WELDED
SCREWED 4 1/8" DIA O.T. 11 - THREADS PER INCH.
EXISTING ANGLE.
THIS ANGLE REMOVED FROM TOP HEADER AND FITTED HERE
3/4" GAS TAPPED HOLE IN BASE PLATE TO BE PLUGGED & WELDED IN.
ANGLES 3" × 2 1/2" × 1/2" × 2'-0" LONG
SATURATED = 2'-6 1/2" LONG
WELD
3" BORE
10 1/4" CRS
1'-1"
A
B
C
D
E
F
J
N

NOTE
ALL 3/4" STUDS · ORIGINALLY FITTED FOR STRAPS (BOTH SIDES OF HEADERS) MUST BE REMOVED.

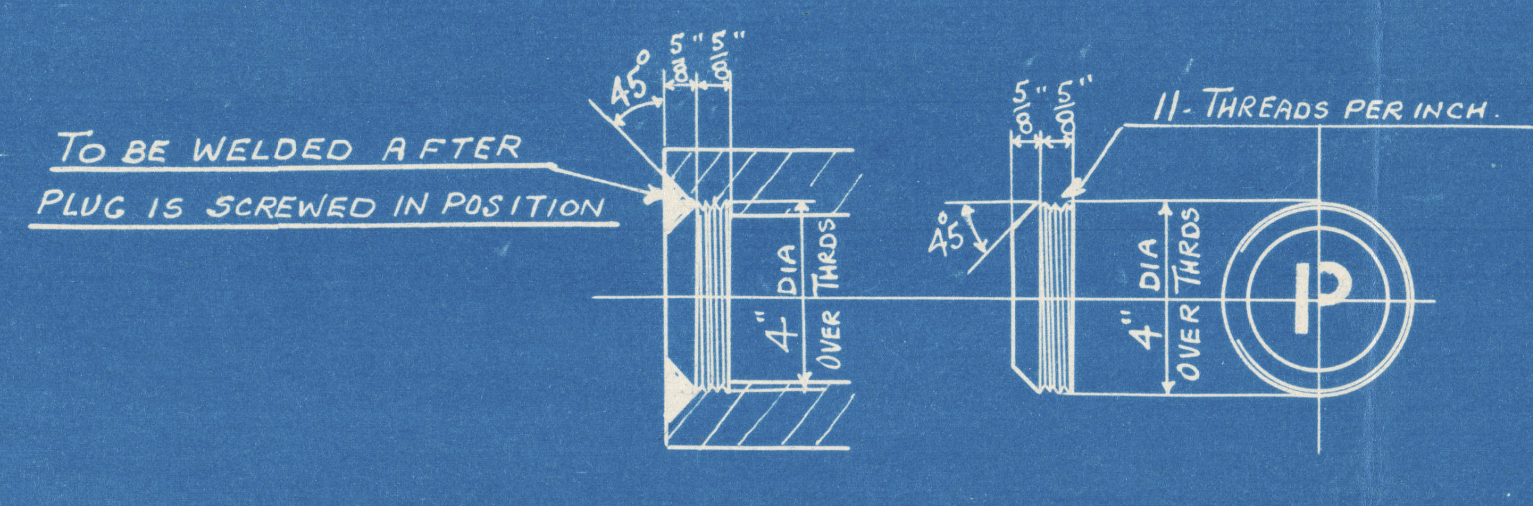
TO BE WELDED AFTER PLUG IS SCREWED IN POSITION
45°
5/8"
11 - THREADS PER INCH.
4" DIA OVER THRDS
P

DETAIL OF HEADER PLUG

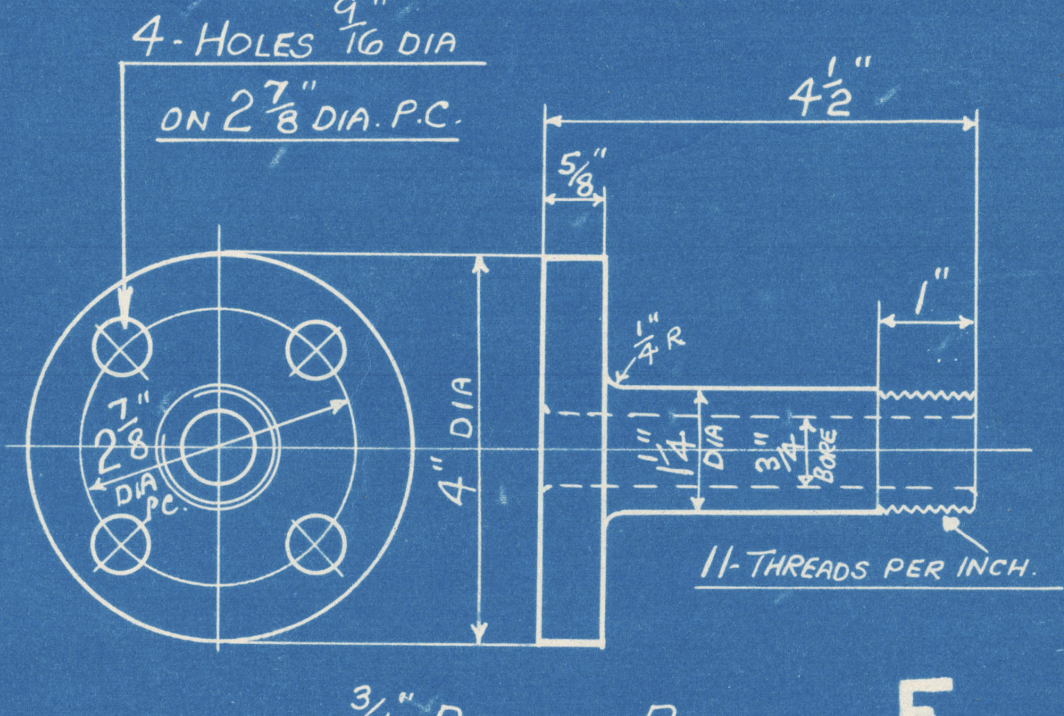
4 - HOLES 9/16" DIA ON 2 7/8" DIA. P.C.
4 1/2"
5/8"
1"
1/4" R
4" DIA
1 1/4" DIA
3/4" BORE
2 7/8" DIA P.C.
11 - THREADS PER INCH.

3/4" DRAIN BRANCH. F
(TYPE — DRG NO S.L. 815.)

NOTE
HEADERS ON THIS DRAWING INDICATE THE MODIFICATIONS NECESSARY - TO EXISTING HEADERS MADE TO DRG NO 9024/20.

EACH PAIR OF HEADERS TO HAVE "HAND" PAINTED ON (WHITE PAINT) TO DENOTE POSITION IN SMOKE BOX.

LIST OF MATERIAL FOR ONE BOILER.

MARK	DESCRIPTION	NO OFF	MATERIAL	REMARKS
A	HEADERS	4	STEEL FORGINGS	1-PAIR. RH & 1-PAIR L H (EXISTING)
B	ELBOW	2	CAST STEEL	DRG NO ML 630
C	"	2	" "	" " ML 1150A
D	BASE PLATES	4	M.S.	" " MM1512A (EXISTING)
E	ANGLE SUPPORTS	4	"	(EXISTING)
F	3/4" DRAIN BRANCH	2	FORGED STEEL	MADE FROM DRG NO S.L. 815 (TYPE)
G	3/4" WHIT STUDS	40	MS	DRG NO MD217C (EXISTING)
H	5/8" " "	16	MS	" " MD218C (EXISTING)
J	3/4" " NUTS	40	STEEL	" " ME62B (EXISTING)
K	7/8" COLLAR STUDS	20	MS	" " MD280A (EXISTING)
L	7/8" WHIT NUTS	20	STEEL	" " ME65B (EXISTING)
M	4 3/4" DOGS	20	DROP FORGING	" " MC1330 (EXISTING)
N	5/8" WHIT NUTS	16	STEEL	" " ME61B (EXISTING)
O	JOINT RINGS	40	"WALKERITE"	" " MG390
P	HEADER PLUGS (SCREWED)	4	M.S.	THIS DRAWING.
R	3/4" GAS PLUGS.	4	MS.	FOR BASE PLATES. (PLUGS WELDED IN)
	BLANK PLUGS (ELT	4	MS	DRG NO MD1920

TO PASS LLOYDS SURVEY
WORKING PRESSURE 230 LBS PER SQ. INCH
TEST 690 " " " "

THE SUPERHEATER CO LTD

TITLE **HEADERS**

ORDER NO'S	REF	CKD		DRAWING NOS
15053M/REV	15053M	7-1-42		15053/30

S.S. "ST MARGARET."

Brs ~~Rept~~ Rept No. 150304.

13.1.42.

THE SUPERHEATER CO. LTD. 8 JAN 1942 BOWDON, ALTRINCHAM, CHESHIRE

LONDON COPY.

SCALE
3" = ONE FOOT
DWN TCD
7/1/42

W116 - 0198

LONDON COPY

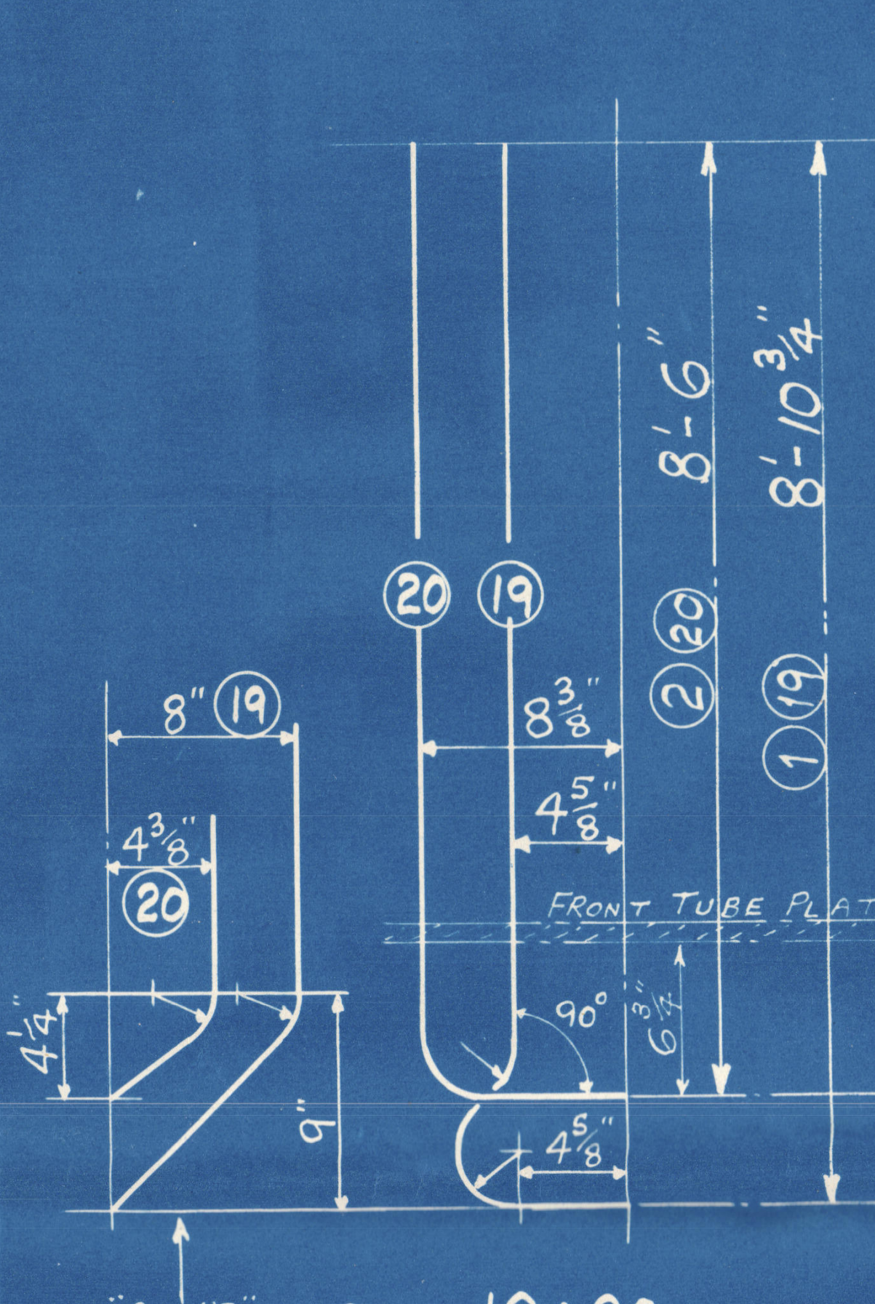
20
19
8'-6"
8"
19
4⅜"
20
8⅜"
4⅝"
FRONT TUBE PLATE
90°
"SET UP"

PIPES 19 & 20
(L.H)

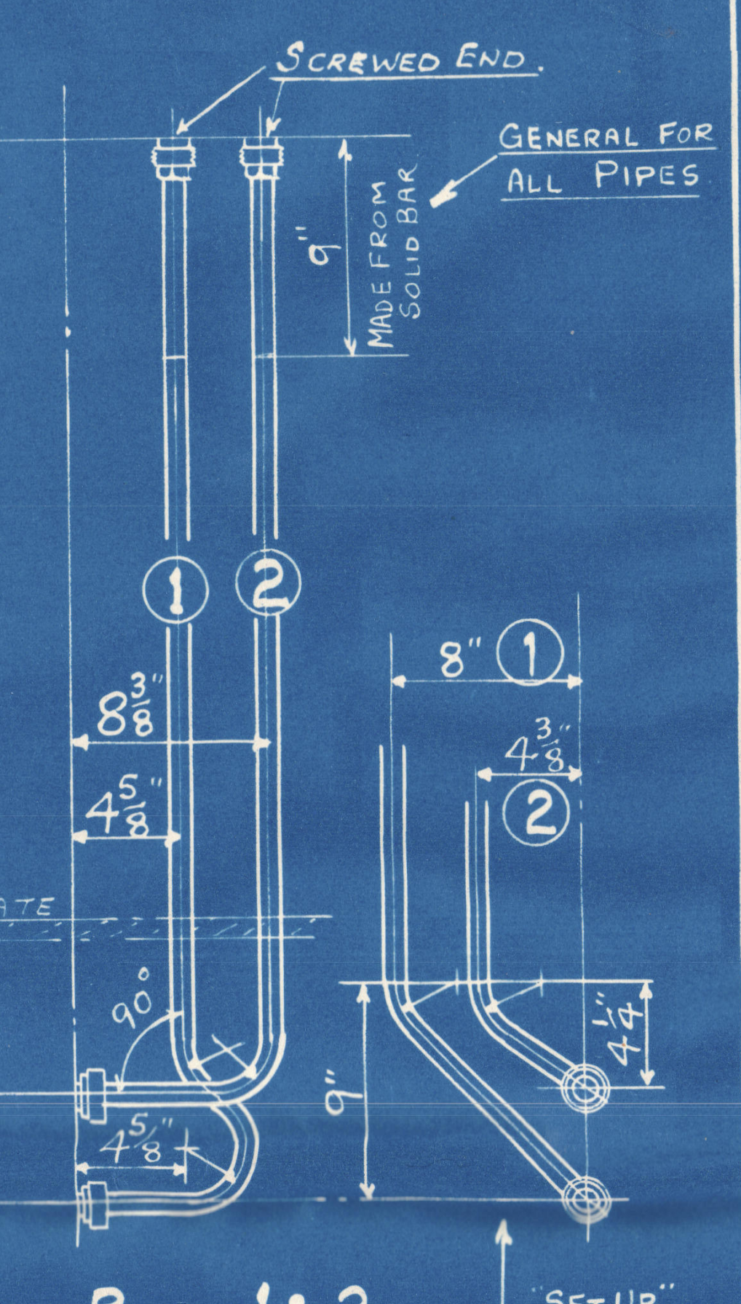
SCREWED END.
GENERAL FOR ALL PIPES
MADE FROM SOLID BAR
9"
8'-10¾"
1
2
8"
1
4⅜"
2
8⅜"
4⅝"
"SET UP"

PIPES 1 & 2.
(R.H)

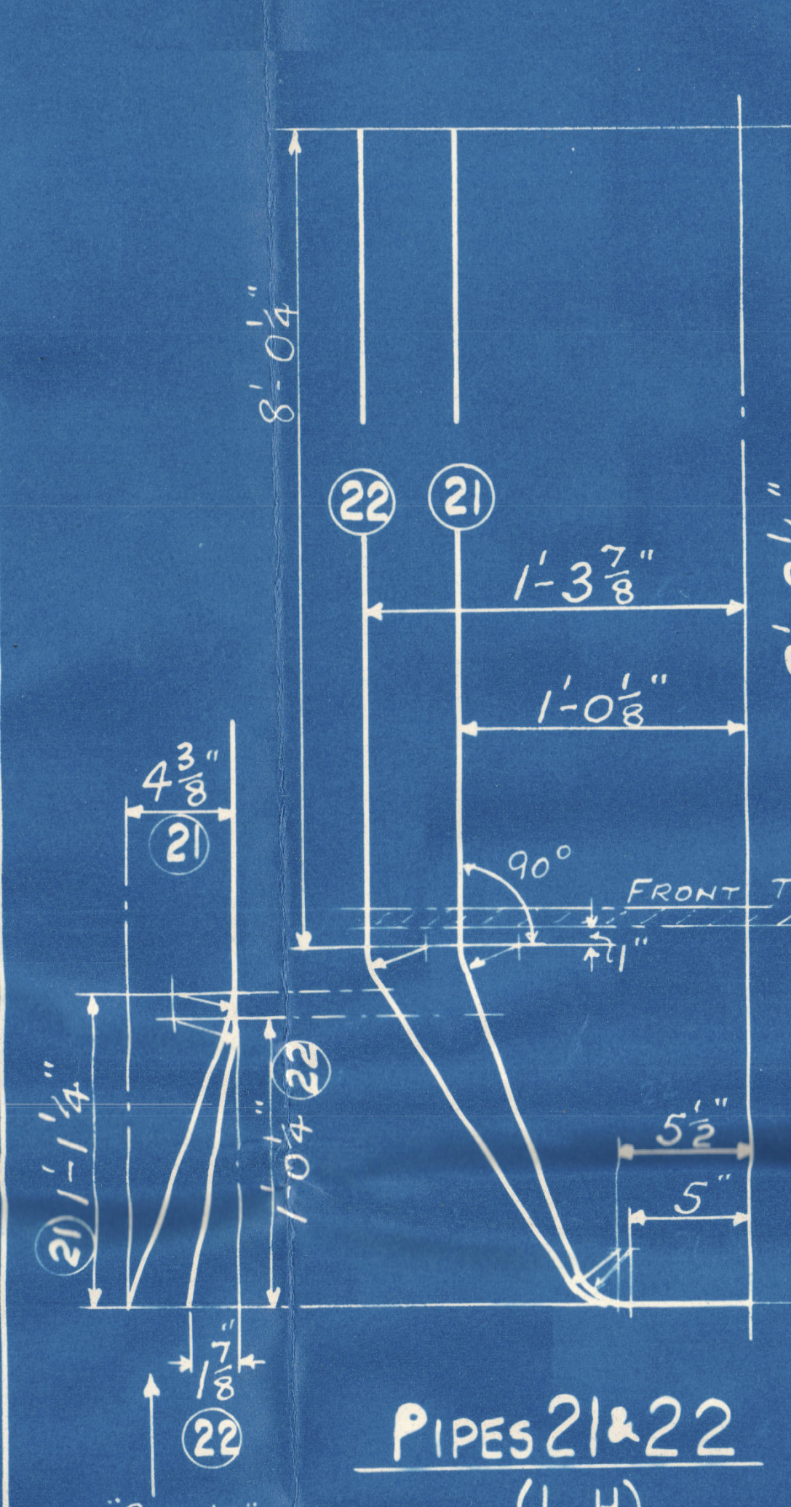
8'-0¼"
22
21
1'-3⅞"
1'-0⅛"
4⅜"
21
FRONT TUBE PLATE
90°
5½"
5"
22
"SET UP"

PIPES 21 & 22
(L.H)

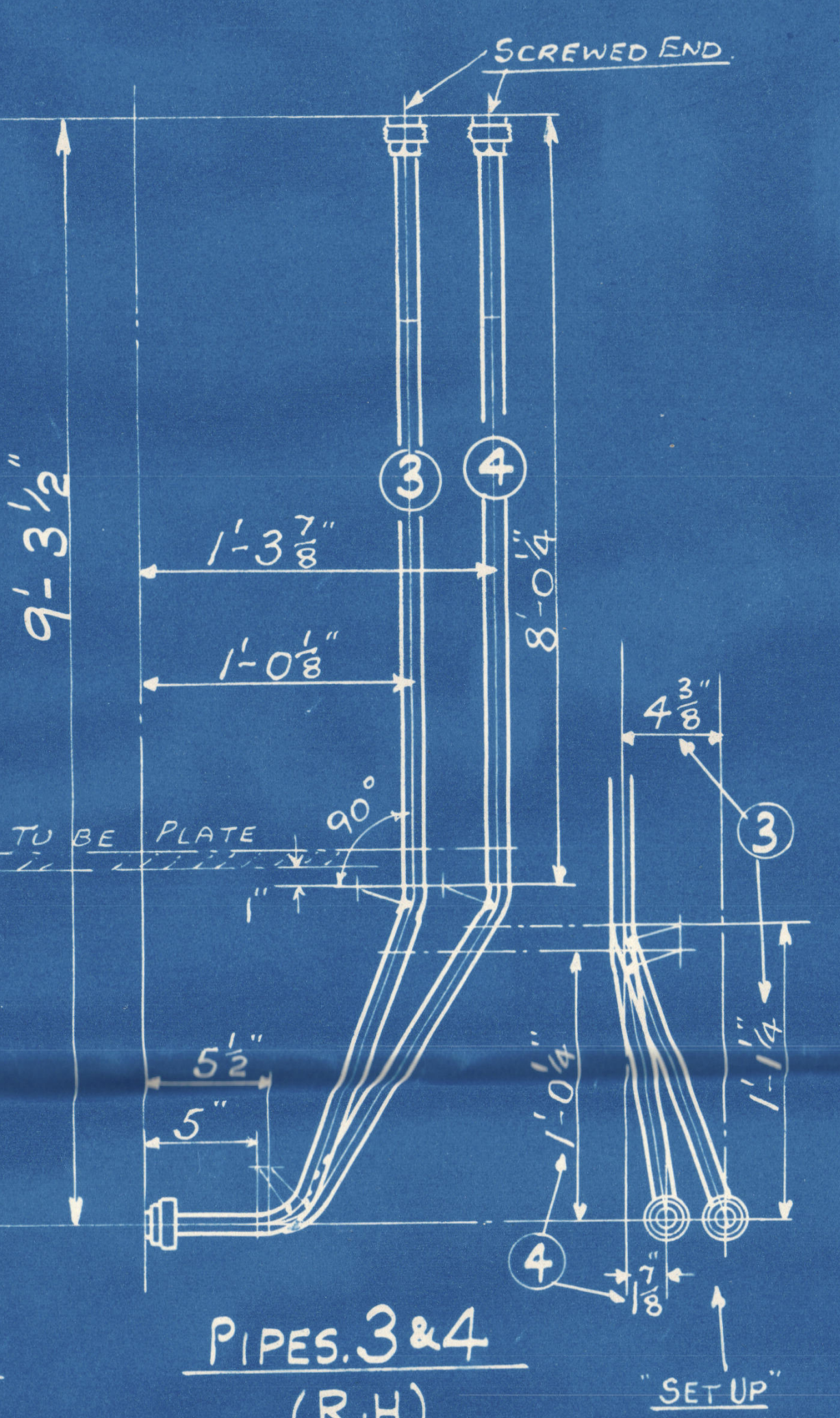
SCREWED END
9'-3½"
3
4
1'-3⅞"
1'-0⅛"
8'-0¼"
4⅜"
3
90°
5½"
5"
4
"SET UP"

PIPES 3 & 4
(R.H)

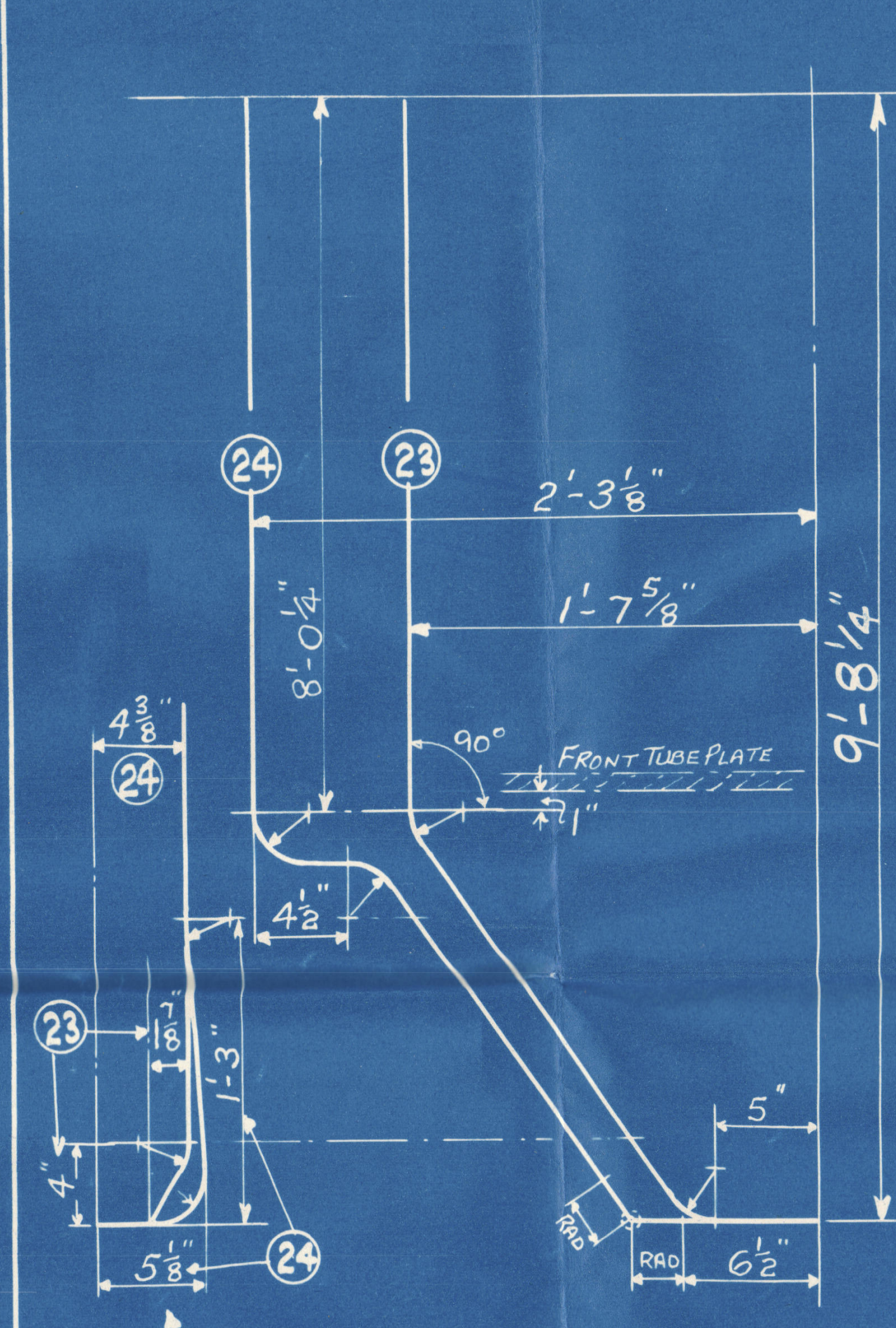
24
23
2'-3⅛"
1'-7⅝"
8'-0¼"
4⅜"
24
FRONT TUBE PLATE
90°
4½"
23
5"
6½"
24
"SET UP"

PIPES 23 & 24
(L.H)

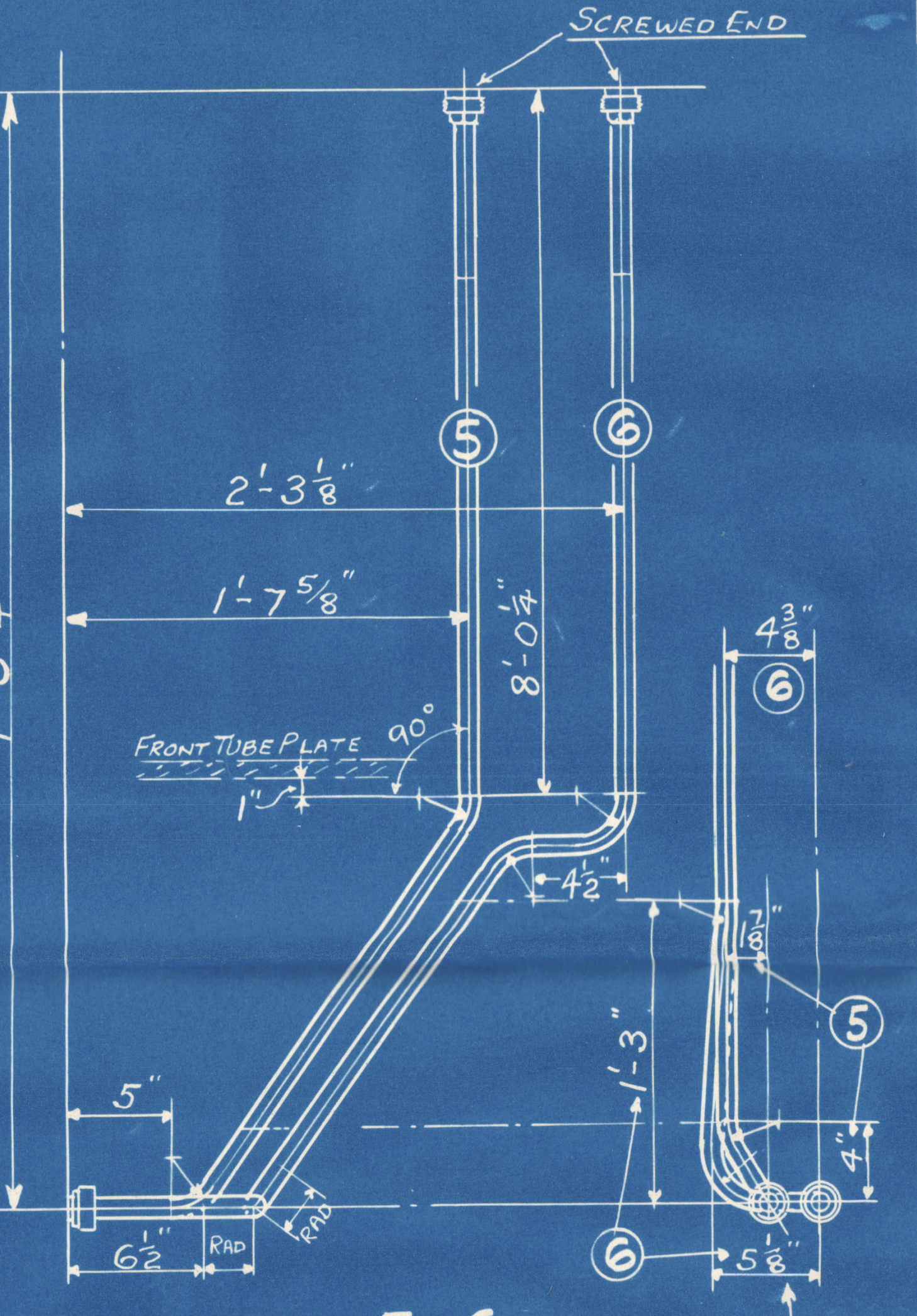
SCREWED END
9'-8¼"
5
6
2'-3⅛"
1'-7⅝"
8'-0¼"
4⅜"
6
FRONT TUBE PLATE
90°
5"
6½"
5
6
"SET UP"

PIPES 5 & 6
(R.H)

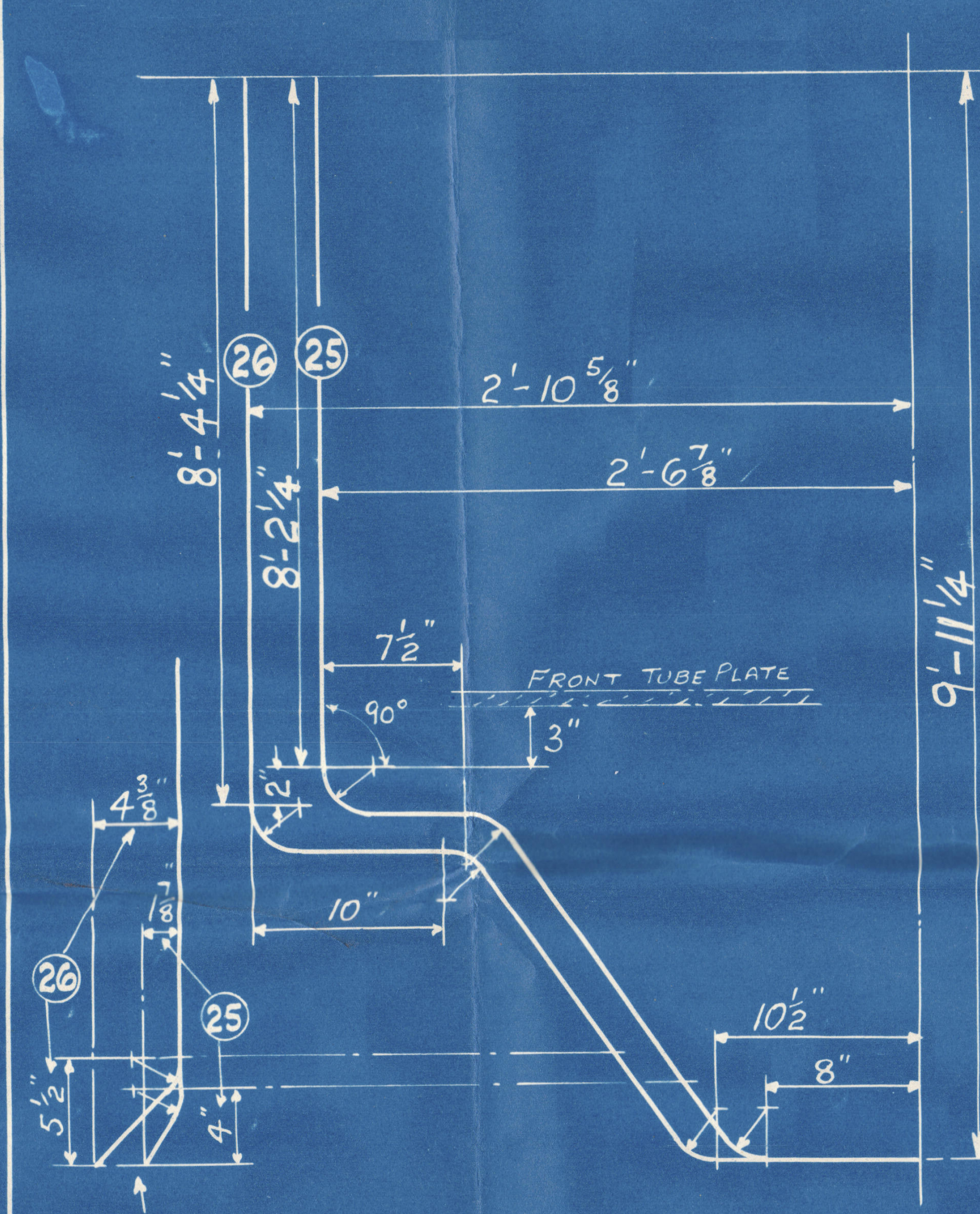
8'-4¼"
8'-2¼"
26
25
2'-10⅝"
2'-6⅞"
7½"
FRONT TUBE PLATE
90°
3"
10"
10½"
8"
26
25
"SET UP"

PIPES 25 & 26
(L.H)

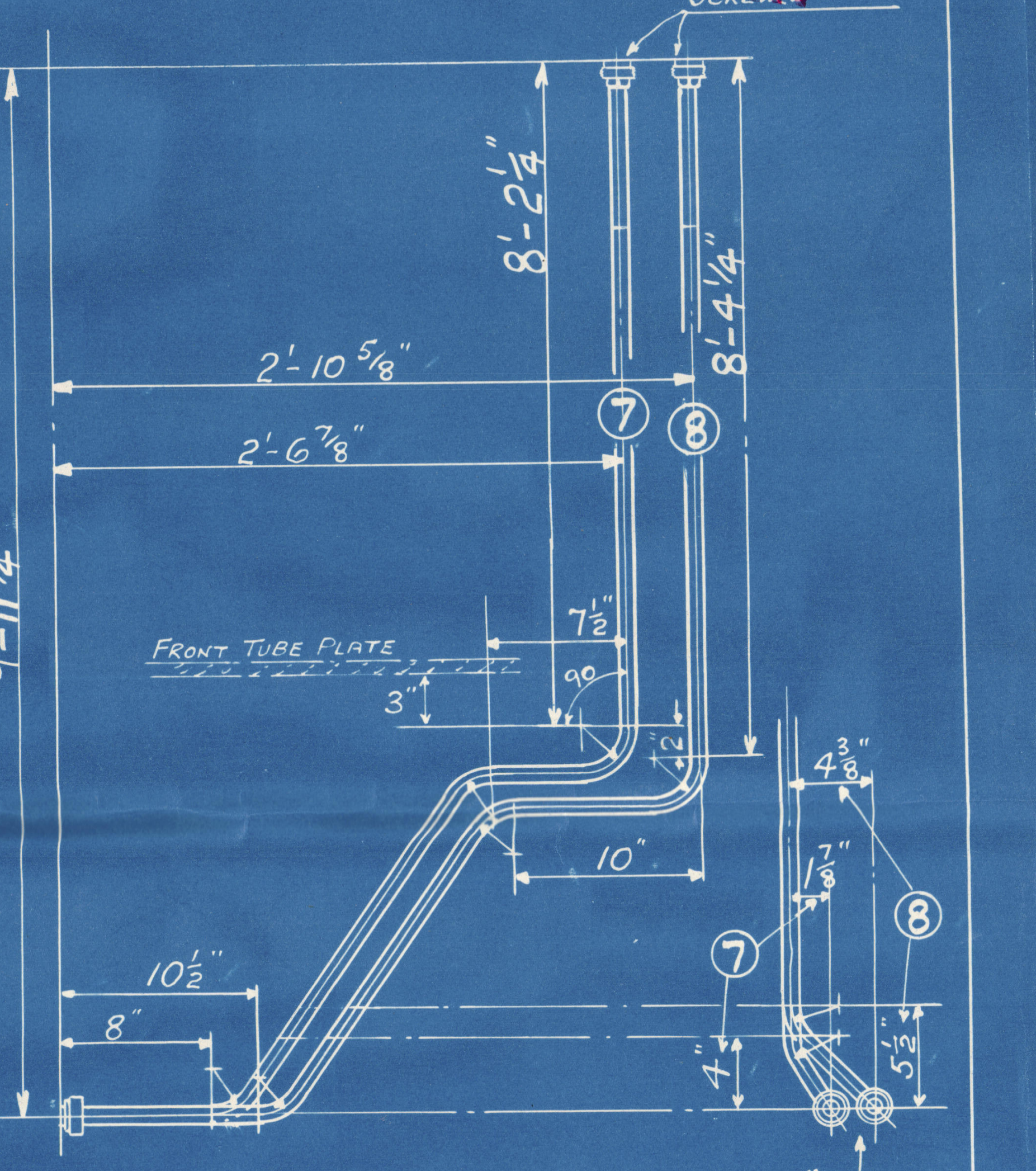
SCREWED END
9'-11¼"
8'-2¼"
8'-4¼"
2'-10⅝"
2'-6⅞"
7
8
FRONT TUBE PLATE
7½"
3"
10"
10½"
8"
7
8
"SET UP"

PIPES 7 & 8
(R.H)

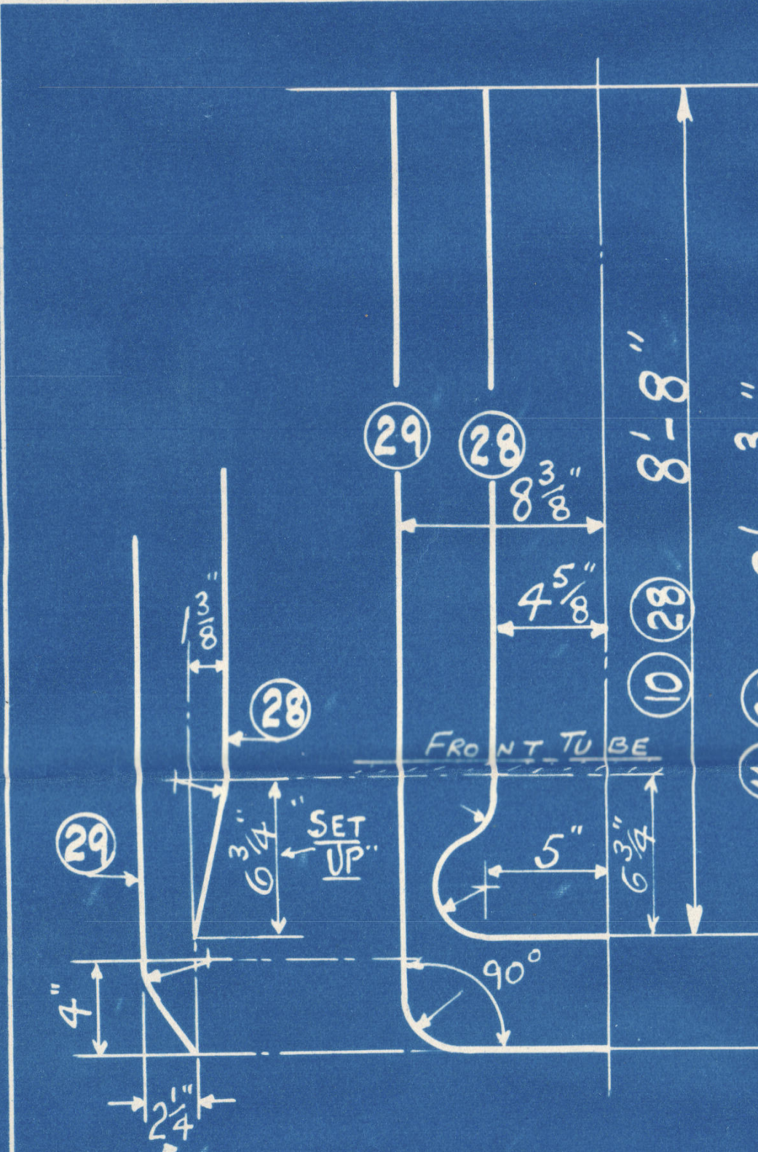
29
28
8⅜"
4⅝"
8'-8"
28
29
FRONT TUBE PLATE
SET UP
5"
90°
"SET DOWN"

PIPES 28 & 29
(L.H)

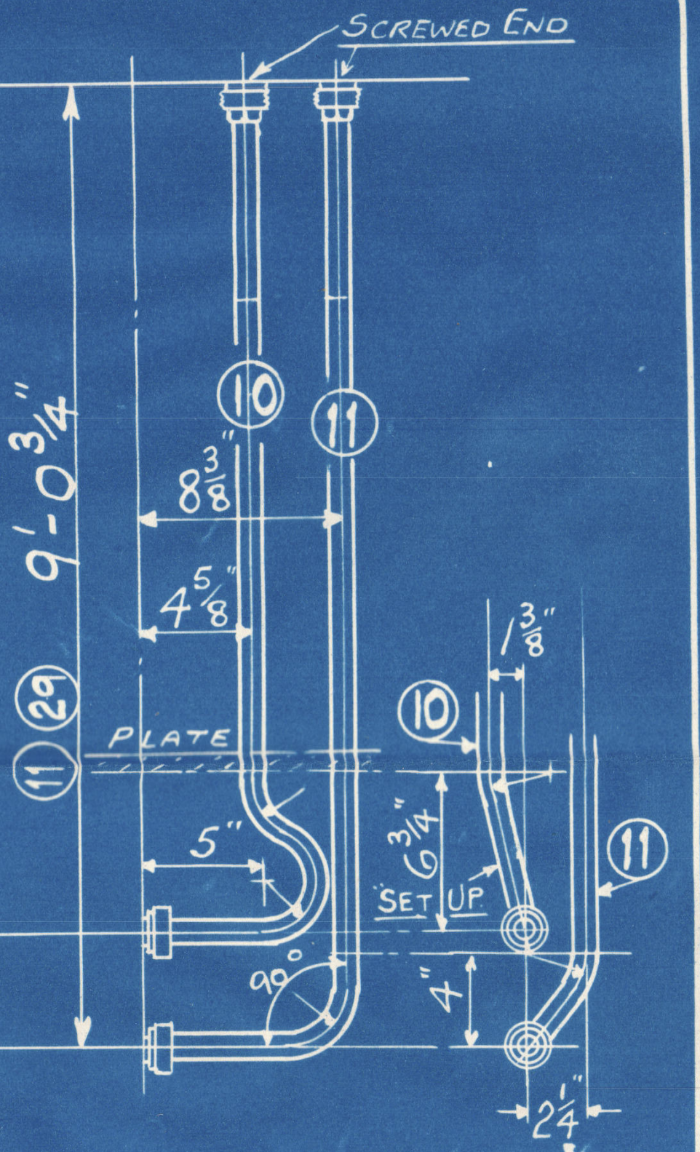
SCREWED END
9'-0¾"
10
11
8⅜"
4⅝"
5"
10
11
"SET DOWN"

PIPES 10 & 11
(R.H)

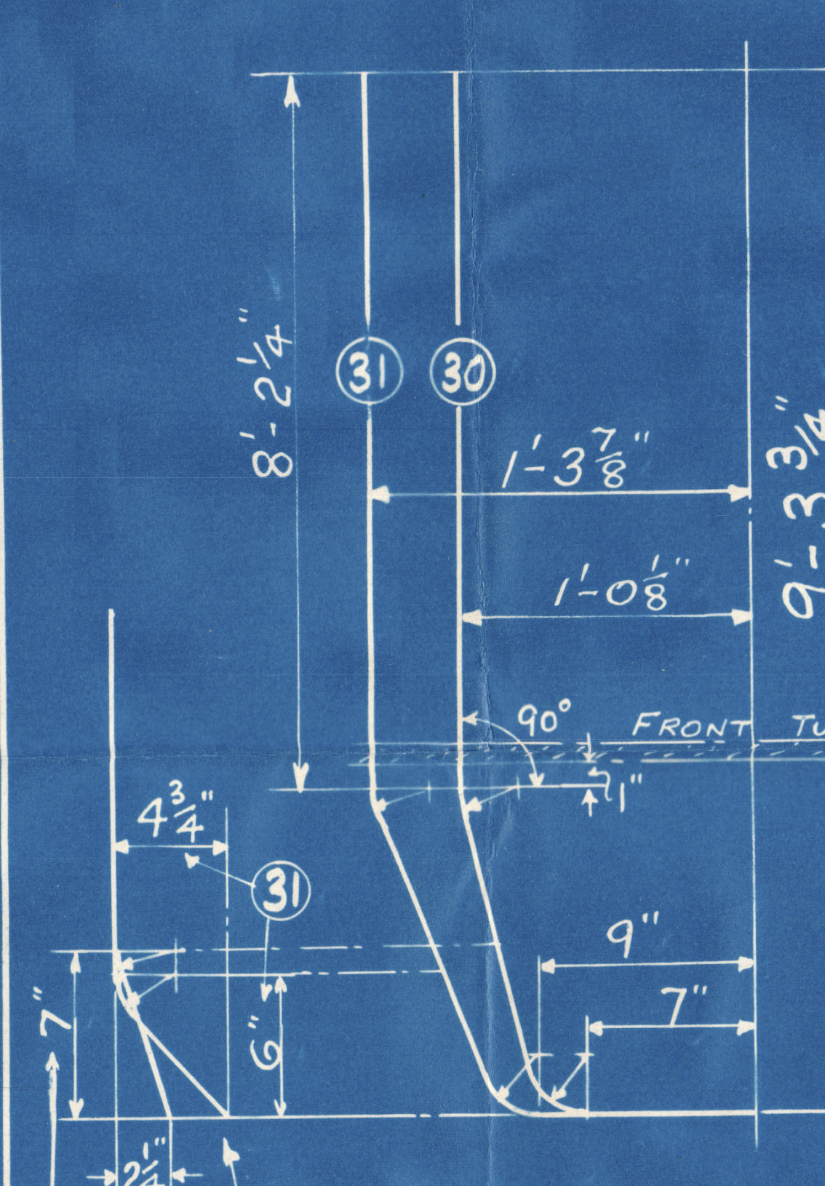
8'-2¼"
31
30
1'-3⅞"
1'-0⅛"
4¾"
31
FRONT TUBE PLATE
90°
9"
7"
30
"SET DOWN"

PIPES 30 & 31
(L.H)

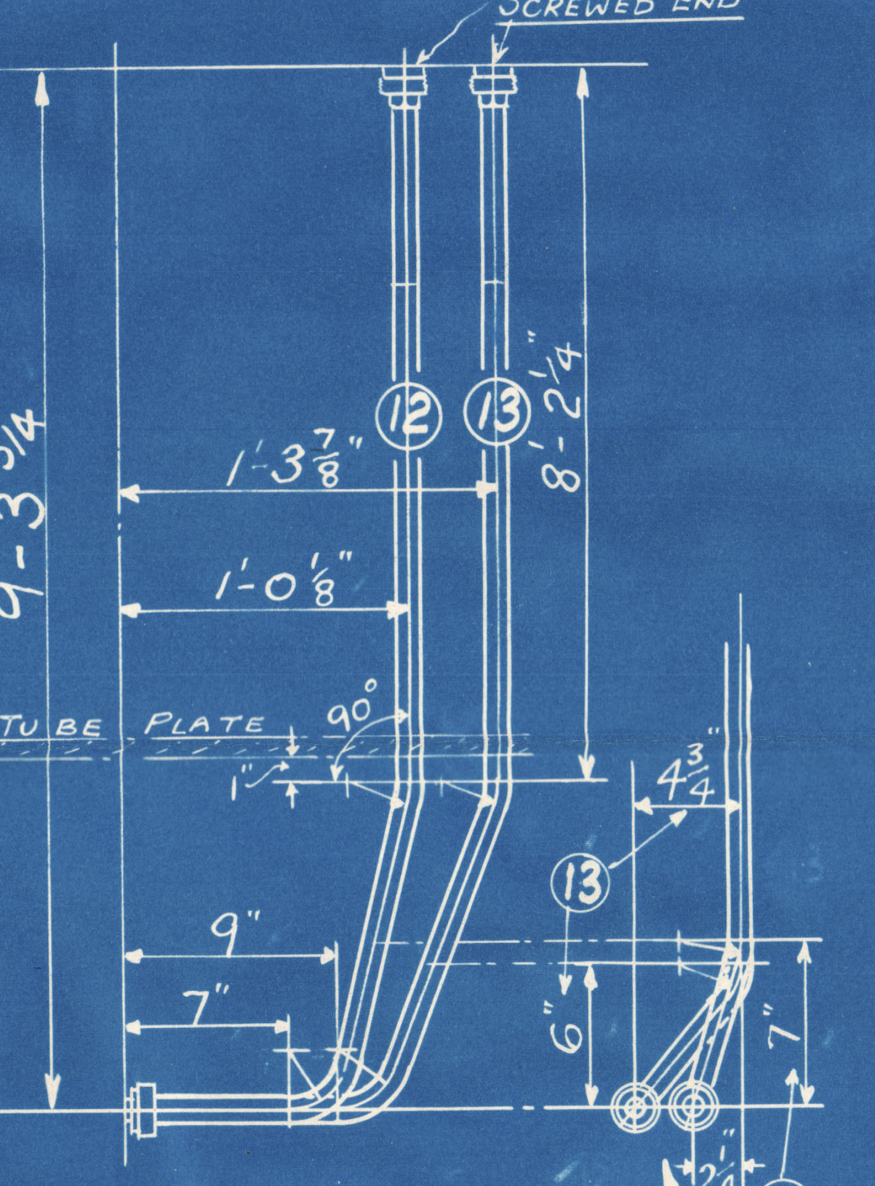
SCREWED END
9'-3¼"
12
13
8'-2¼"
1'-3⅞"
1'-0⅛"
90°
9"
7"
13
12
"SET DOWN"

PIPES 12 & 13
(R.H)

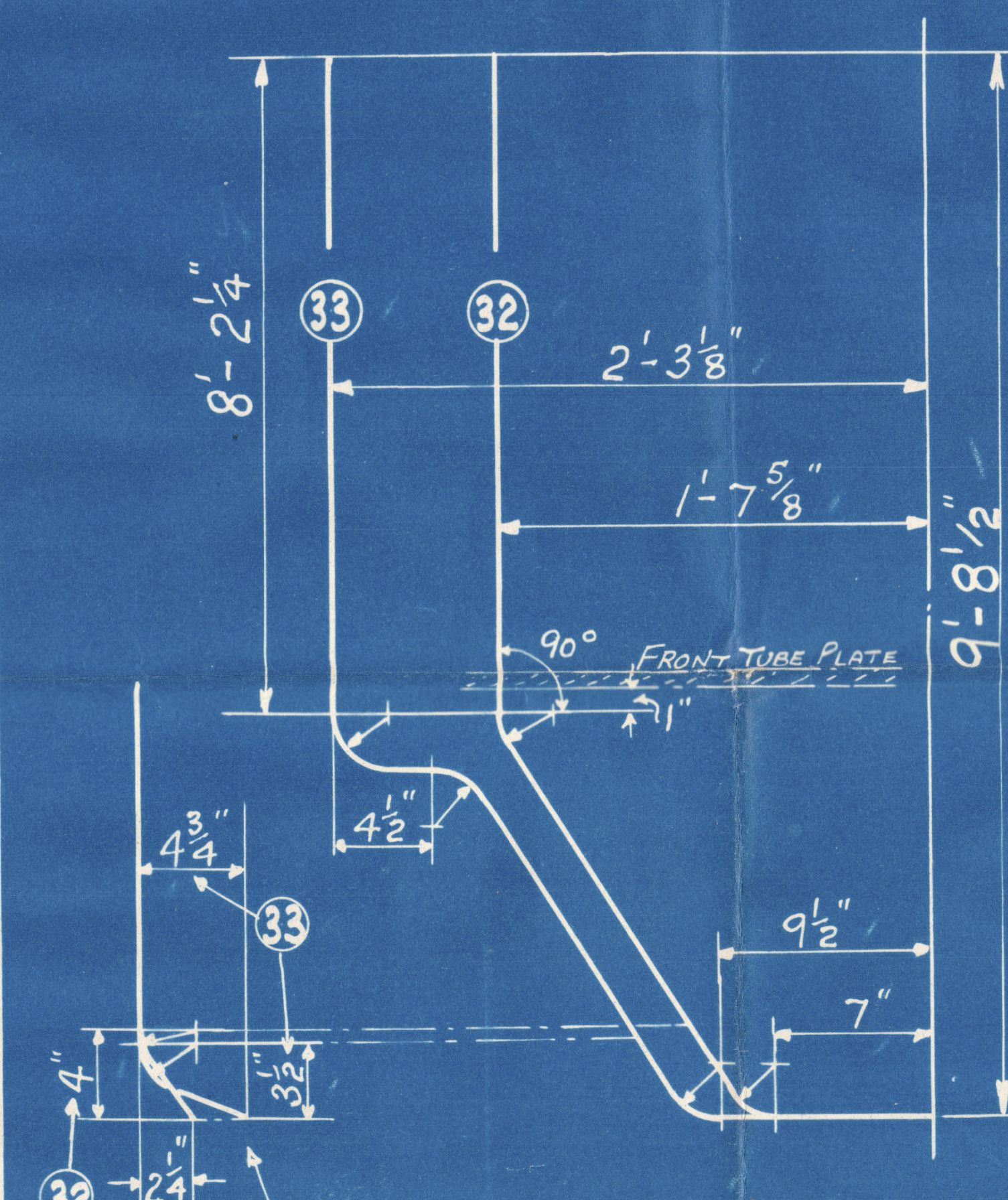
8'-2¼"
33
32
2'-3⅛"
1'-7⅝"
FRONT TUBE PLATE
90°
4½"
4¾"
33
9½"
7"
32
"SET DOWN"

PIPES 32 & 33
(L.H)

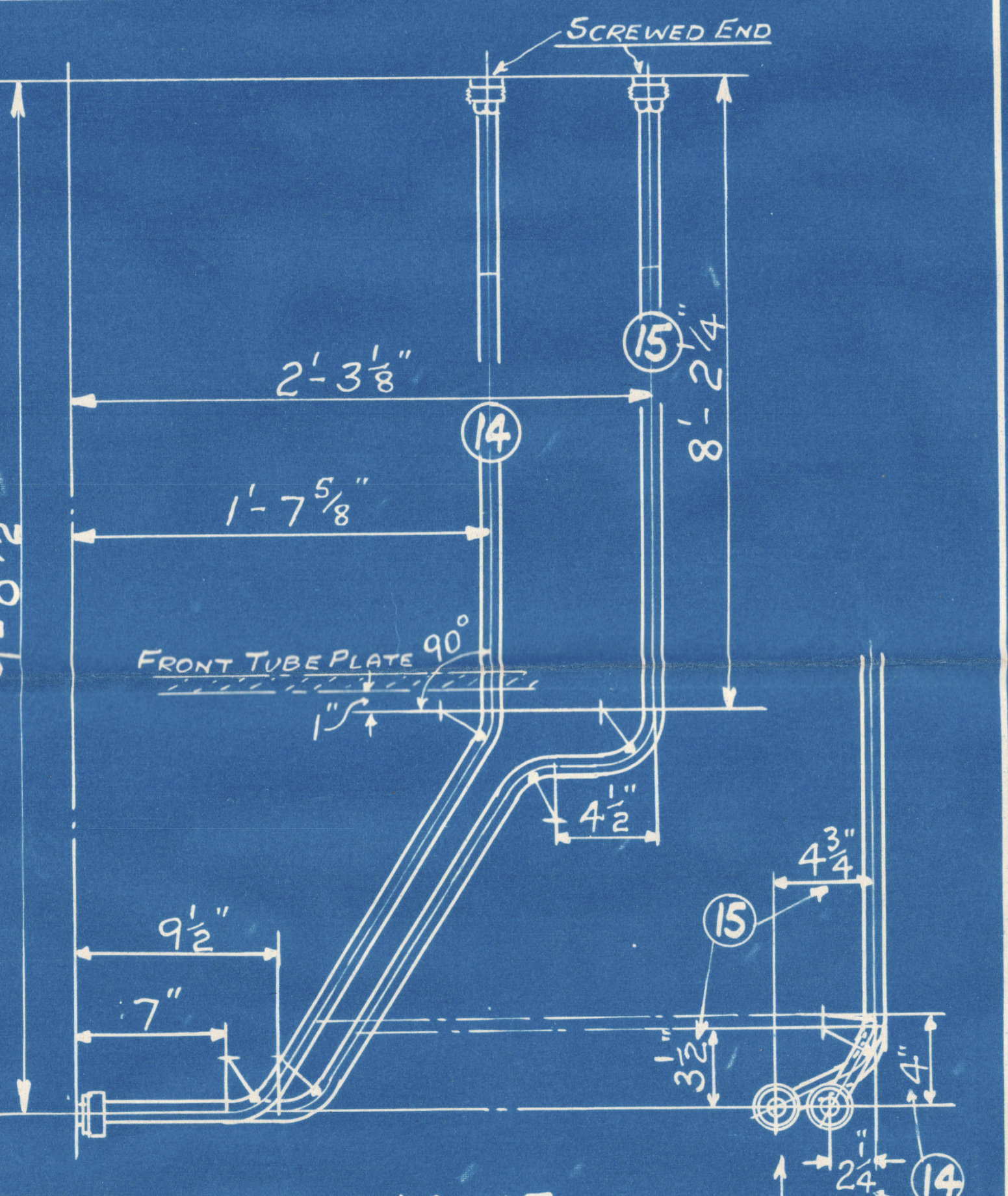
SCREWED END
9'-8½"
15
14
8'-2¼"
2'-3⅛"
1'-7⅝"
FRONT TUBE PLATE
90°
4½"
9½"
7"
15
14
"SET DOWN"

PIPES 14 & 15
(R.H)

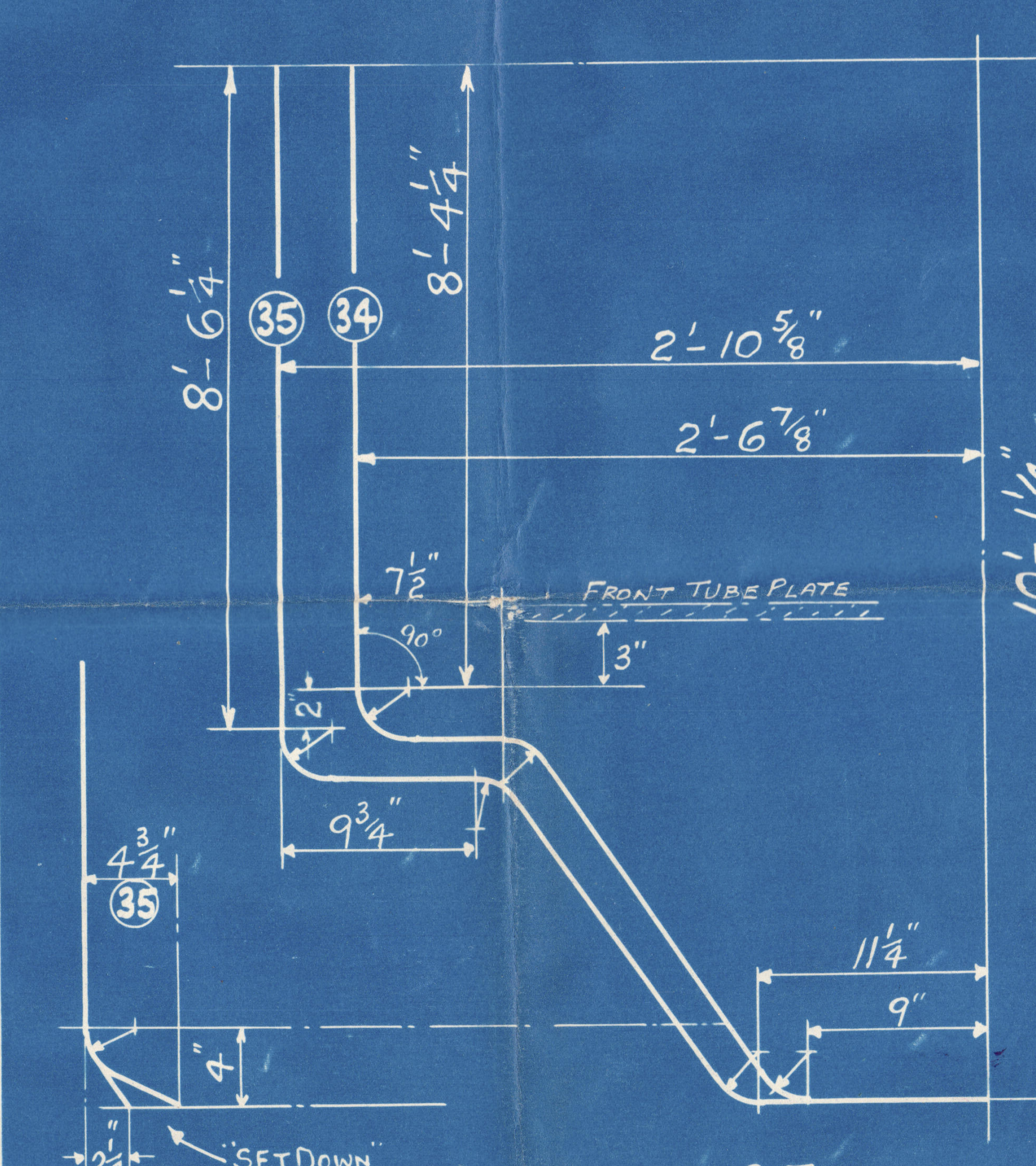
8'-6¼"
35
34
2'-10⅝"
2'-6⅞"
7½"
FRONT TUBE PLATE
90°
3"
9¾"
11¼"
9"
4¾"
35
34
"SET DOWN"

PIPES 34 & 35
(L.H)

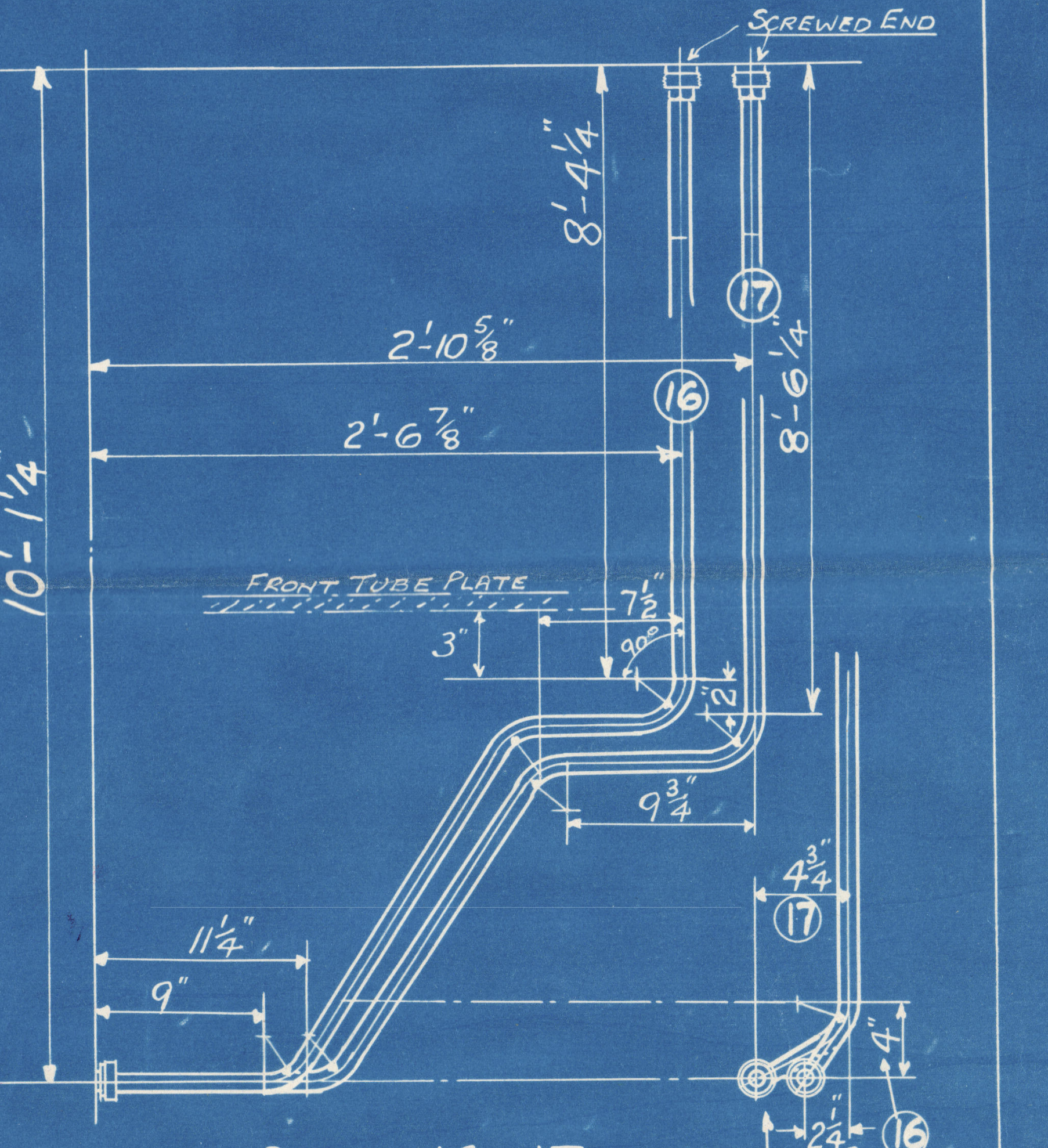
SCREWED END
10'-1¼"
8'-4¼"
8'-6¼"
17
16
2'-10⅝"
2'-6⅞"
FRONT TUBE PLATE
7½"
3"
9¾"
11¼"
9"
4¾"
17
16
"SET DOWN"

PIPES 16 & 17
(R.H)

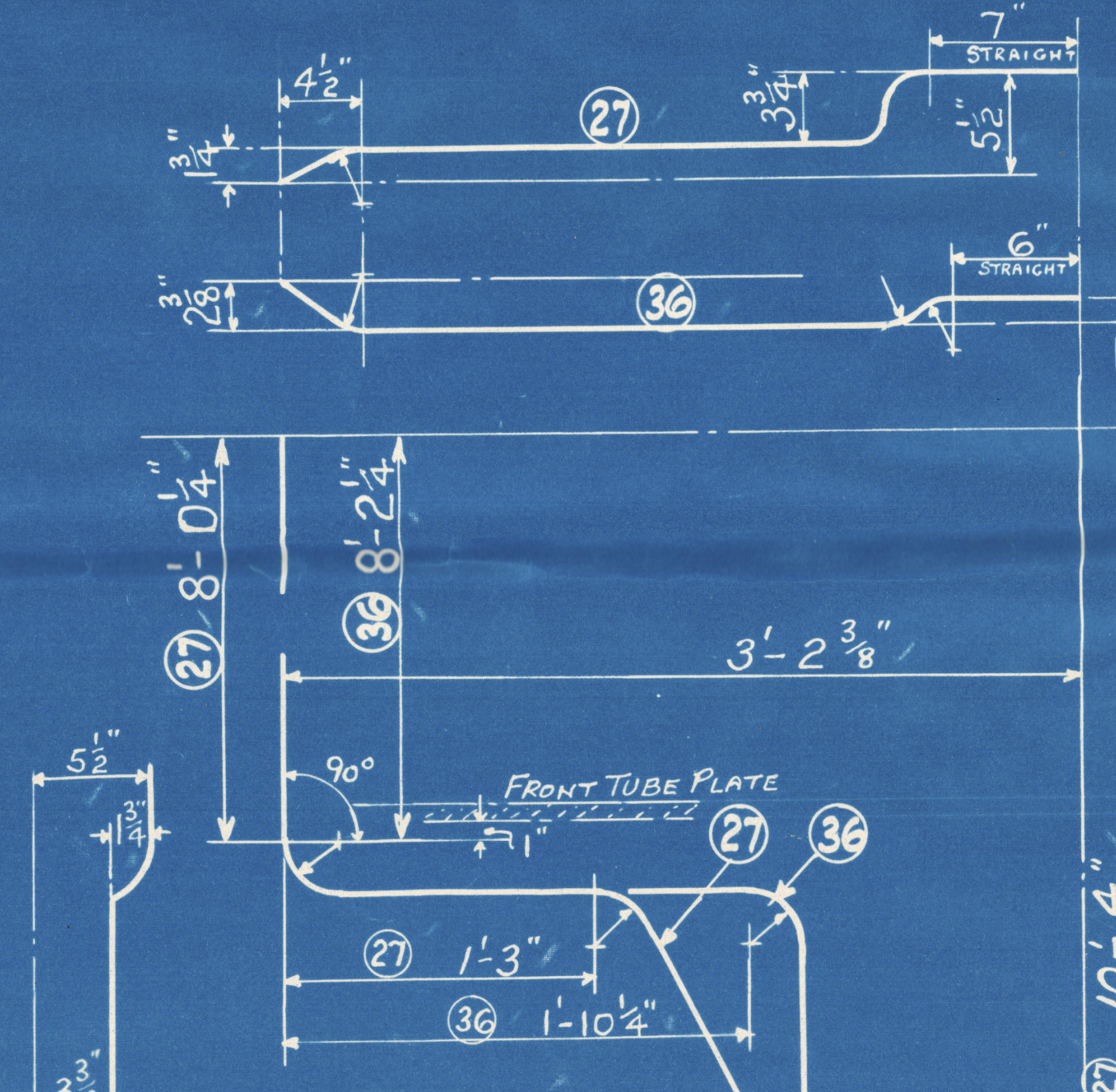
27
36
STRAIGHT
7"
6"
8'-0¼"
8'-2¼"
27
36
3'-2⅜"
90°
FRONT TUBE PLATE
27
36
1'-3"
1'-10¼"
5½"
3¾"
27
11"
7"
"SET UP"

PIPES 27 & 36
(L.H)

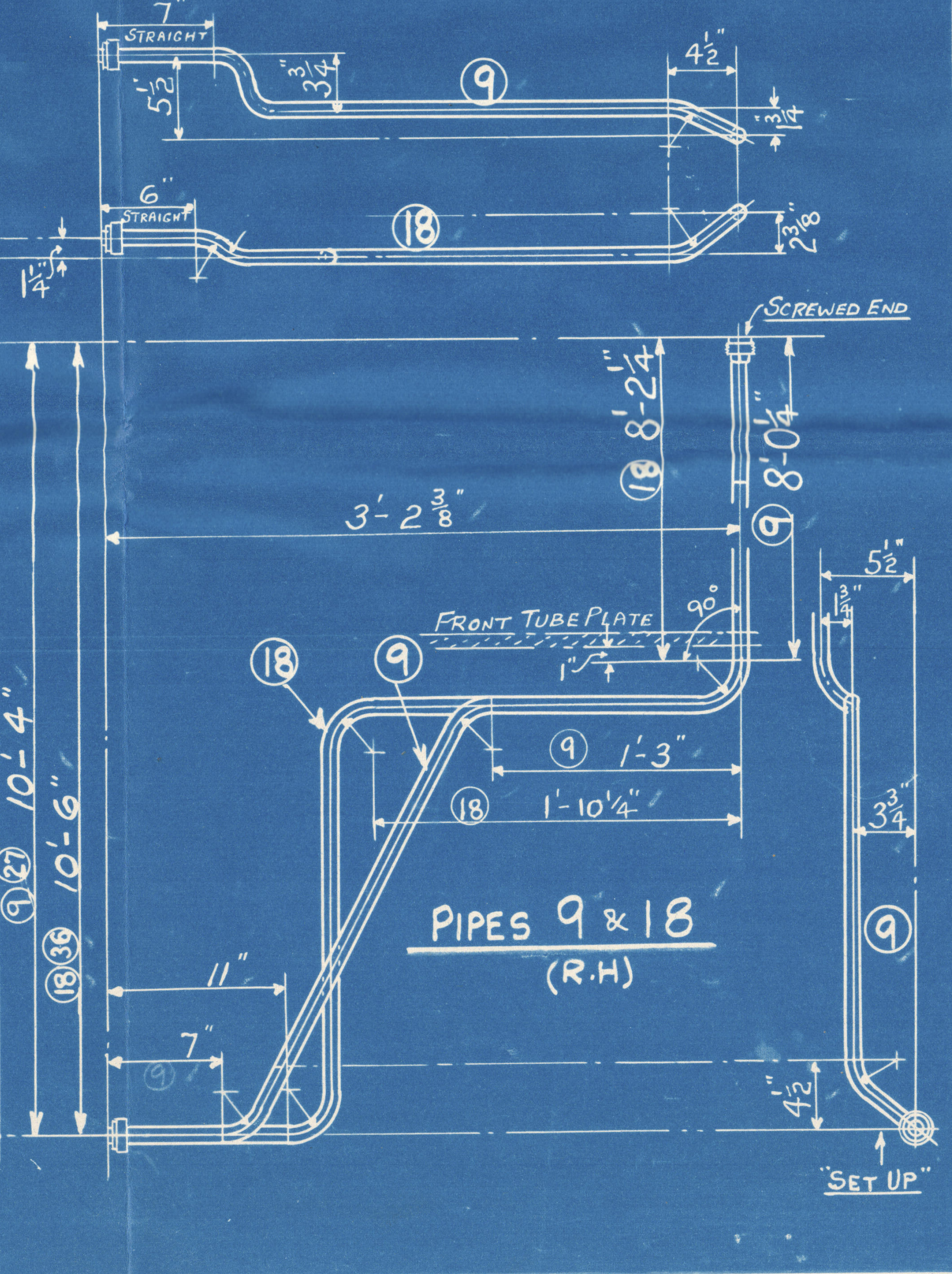
STRAIGHT
7"
9
18
6"
SCREWED END
18 8'-2¼"
9 8'-0¼"
3'-2⅜"
FRONT TUBE PLATE
90°
18
9
1'-3"
1'-10¼"
10'-4"
10'-6"
11"
7"
5½"
3¾"
9
"SET UP"

PIPES 9 & 18
(R.H)

SCALE
1½" = ONE FOOT.
DWN TCD

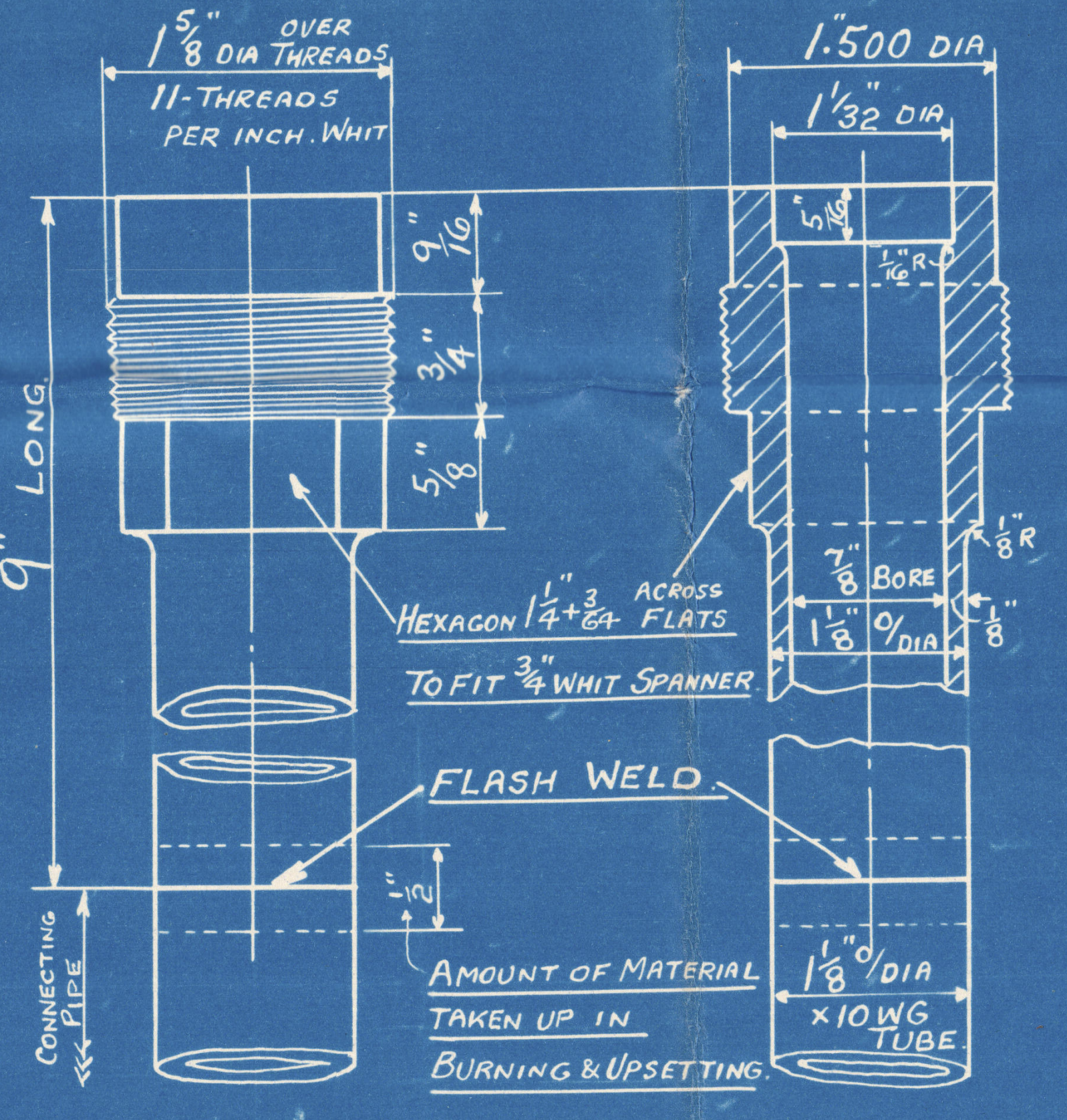
1⅝" DIA THREADS OVER
11-THREADS PER INCH. WHIT
9" LONG
9/16"
¾"
⅝"
HEXAGON 1¼" + 3/64 ACROSS FLATS
TO FIT ¾" WHIT SPANNER
FLASH WELD.
½"
AMOUNT OF MATERIAL TAKEN UP IN BURNING & UPSETTING.
CONNECTING PIPE
1.500 DIA
1 1/32" DIA
5/16"
1/16" R
⅞" BORE
1⅛" O/DIA
⅛" R
⅛"
1⅛" O/DIA ×10 WG TUBE.

DETAIL OF SCREWED END. (FULL SIZE)
MADE FROM SOLID BAR. (M.S.)
TO BE SUITABLY PROTECTION UNTIL READY FOR ERECTION.

LIST OF MATERIAL FOR ONE BOILER

PIPE NO'S	DESCRIPTION	NO OFF PER SET	PIPE LENGTH BEFORE BENDING
1 & 19	CONNECTING PIPE	1-OFF EACH	9'-0½"
2 & 20	" "	1 " "	8'-7"
3 & 21	" "	1 " "	9'-3"
4 & 22	" "	1 " "	9'-5"
5 & 23	" "	1 " "	9'-10½"
6 & 24	" "	1 " "	10'-9"
7 & 25	" "	1 " "	11'-0"
8 & 26	" "	1 " "	11'-6"
9 & 27	" "	1 " "	12'-1"
10 & 28	" "	1 " "	8'-7"
11 & 29	" "	1 " "	9'-0½"
12 & 30	" "	1 " "	9'-5"
13 & 31	" "	1 " "	9'-8½"
14 & 32	" "	1 " "	10'-0"
15 & 33	" "	1 " "	10'-9½"
16 & 34	" "	1 " "	11'-2½"
17 & 35	" "	1 " "	11'-9"
18 & 36	" "	1 " "	12'-10"
—	COLLAR (M.S)	36	

NOTES

① RADIUS OF BENDS & SETS ON PIPES NOS 10 & 28 = 2 1/16"

② " " " " " ON ALL OTHER PIPES = 2 9/16

③ ALL DIMENSIONS TO BE WORKED TO- -AS ACCURATELY AS POSSIBLE.

④ EVERY PIPE MUST HAVE A METAL TAG- -SECURELY FIXED ON. STATING PIPE NO.

⑤ COLLARS MUST HAVE PIPE NO CLEARLY STAMPED ON.

⑥ ALL HEXAGONS AT BACK OF FEMALE END MUST BE- -FIXED ONE WAY AS SHOWN THUS:- ℄ OF BOILER TUBES. FLATS

SOLID DRAWN STEEL PIPES
1⅛" OUTS DIA: x 10. W.G. THICK

TO PASS LLOYDS SURVEY
WORKING PRESSURE 230 LBS PER SQ. INCH
TEST 690 " " " "

C.W.
13-1-42.

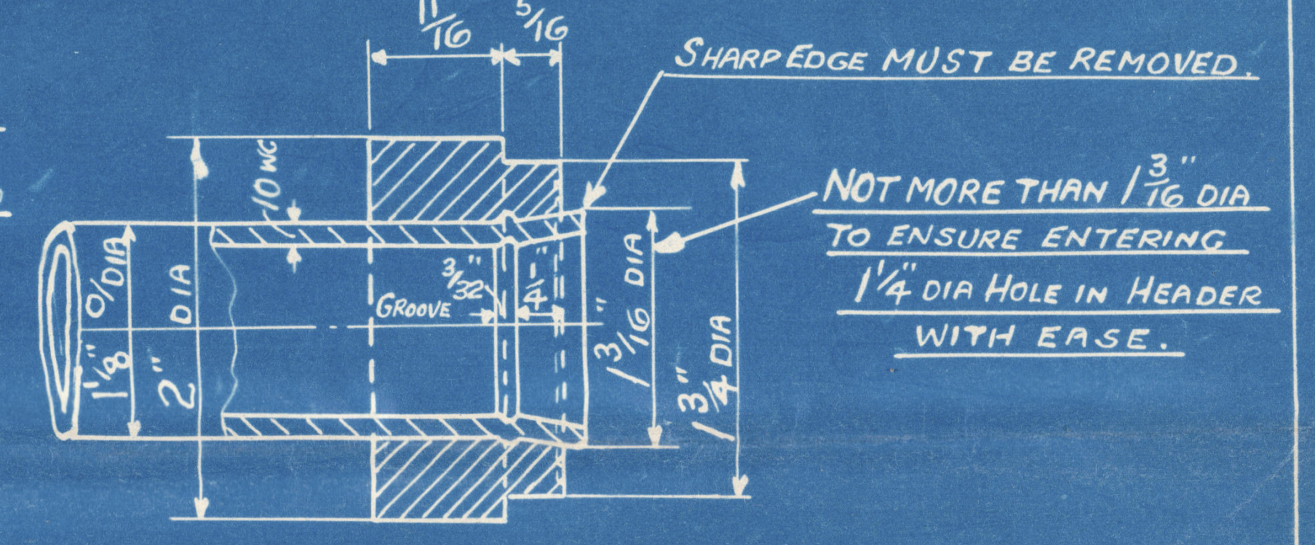
11/16"
5/16"
SHARP EDGE MUST BE REMOVED.
NOT MORE THAN 1 3/16" DIA TO ENSURE ENTERING 1¼" DIA HOLE IN HEADER WITH EASE.
10 WG
1⅛" O/DIA
2" DIA
3/32" GROOVE
¼"
1 3/16" DIA
1¾" DIA

DETAIL OF COLLAR END (FULL SIZE)

THE SUPERHEATER Cº Lᵀᴰ

TITLE CONNECTING PIPES.

ORDER NO'S	REF	CKD	DRAWING NOS
15053 M/REV	15053M	8/1/42	15053/40

S.S. "ST MARGARET."

Brs rept No. 15031

THE SUPERHEATER CO. LTD
8 JAN 1942
BOWDON, ALTRINCHAM, CHESHIRE.

LONDON COPY.

W116-0196

LONDON COPY.

THIS DIMENSION TO BE STRICTLY ADHERED TO.
D
C
B
A
ELEMENT HANGER
DRG No 9024/52
℄ OF HANGER PIN.
TRUE HORIZONTAL.
PIPE "Y" = 1'-7" *
PIPE "Y" = 1'-9 9/16" *
PIPE "X" = 11 1/2" *
SET
Y
X
90°
3'-0 1/2" (ALL ELEMENTS)
2'-11 15/16"
10 1/4"
10"
7 1/2"
5"
1 7/8" CRS
CAPS
E
F
No 1. SPACER BAR
SPECTACLE PLATE No 1.
SPECTACLE PLATE No 2
SPECTACLE PLATE No 3
No 2. SPACER BAR
1 1/4" LUG
COTTER WELDED TO SPECTACLE PLATE.
PIPES X & 3 = 2'-7 7/8"
PIPES 4 & 5 = 2'-6 3/4"
PIPES 6 & 7 = 2'-6 7/8"
PIPE 10 = 2'-4 7/8"
PIPE 9 = 2'-4 7/8"
PIPE 6 = 2'-4 5/16"
PIPE 5 = 2'-4 1/16"
PIPE 3 = 2'-1 7/16"
PIPE X = 1'-11 7/16"
PIPE Y = 2'-2 7/8"
PIPE 8 = 2'-1 1/2"
PIPE 7 = 2'-0 13/16"
PIPE 4 = 2'-1 5/16"
180°
2 9/16" R
FOR ALL ELEMENTS.
ALL THESE BENDS MUST BE STRESS RELIEVED.
℄ OF PIPE "Y".
ALL COUPLING NUTS TO BE PLACED ON TUBES AFTER BENDING IF POSSIBLE.
UPPER SPECTACLE PLATES WELDED TO ELEMENTS ON BOTH SIDES OF 2 PIPES AS SHOWN.
"STOPS" WELDED TO ELEMENTS ON BOTH SIDES WHERE SHOWN THUS *
COTTER WELDED TO SPECTACLE PLATE - BOTH SIDES.
No 2. SPACER BAR.
ONE "STOP" AT EACH END.
9 1/2"
1'-0 1/16"
9 5/8"
ELEMENT D
ELEMENT C
ELEMENT B
ELEMENT A

NOTE "ALL "STARRED" DIMENSIONS TO BE WORKED TO AS ACCURATE AS POSSIBLE

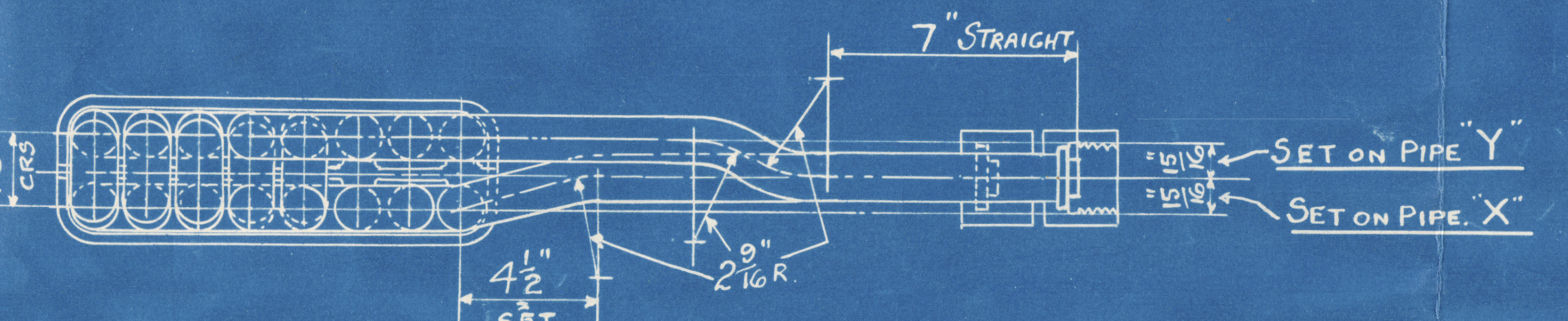
7" STRAIGHT
1 7/8 CRS
4 1/2" SET
2 9/16" R
SET ON PIPE "Y"
SET ON PIPE "X"

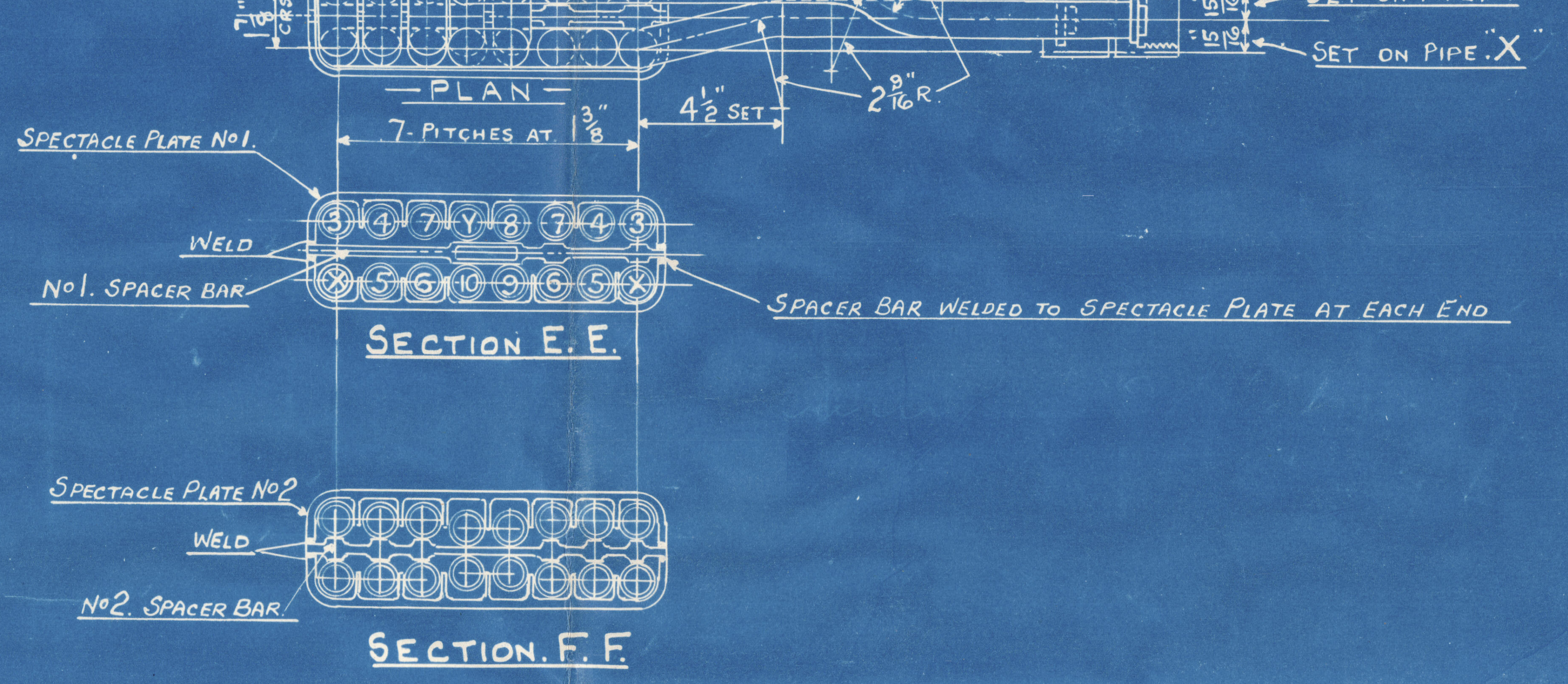
7" STRAIGHT
SET ON PIPE "Y".
SET ON PIPE "X".
PLAN
7 - PITCHES AT 1 3/8"
4 1/2" SET
2 9/16" R
SPECTACLE PLATE No 1
WELD
No 1. SPACER BAR
SPACER BAR WELDED TO SPECTACLE PLATE AT EACH END
SECTION E.E.
SPECTACLE PLATE No 2
WELD
No 2. SPACER BAR
SECTION F.F.

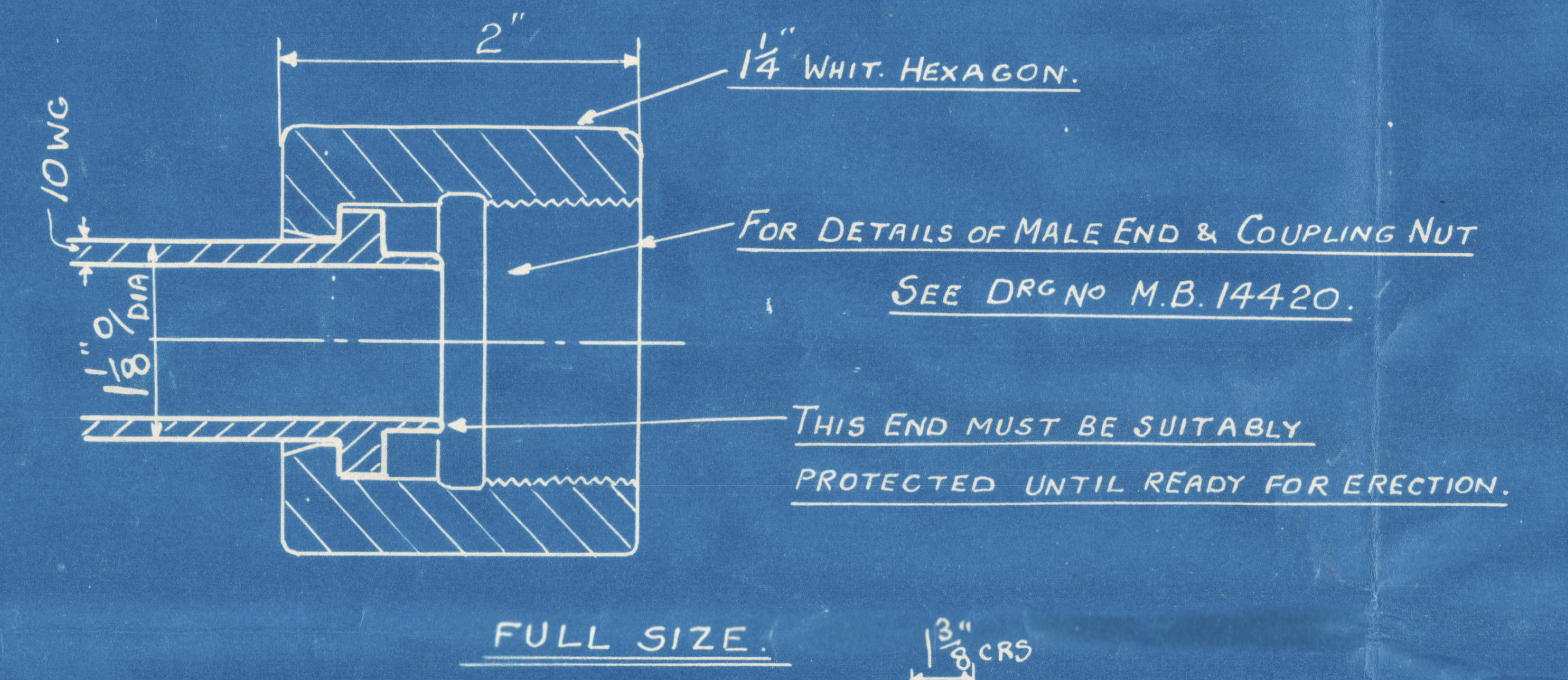
2"
1 1/4" WHIT. HEXAGON.
10 WG
1 1/8" DIA
FOR DETAILS OF MALE END & COUPLING NUT SEE DRG No M.B. 14420.
THIS END MUST BE SUITABLY PROTECTED UNTIL READY FOR ERECTION.

FULL SIZE

SOLID DRAWN STEEL PIPES 1 1/8" OUTS: DIA: X 10.W.G. THICK

TO PASS LLOYDS SURVEY

WORKING PRESSURE 230 LBS PER SQ. INCH

TEST " " 690 " " " "

EVERY ELEMENT MUST HAVE A METAL TAG FIXED ON.- CLEARLY STATING IDENTIFICATION "LETTER".

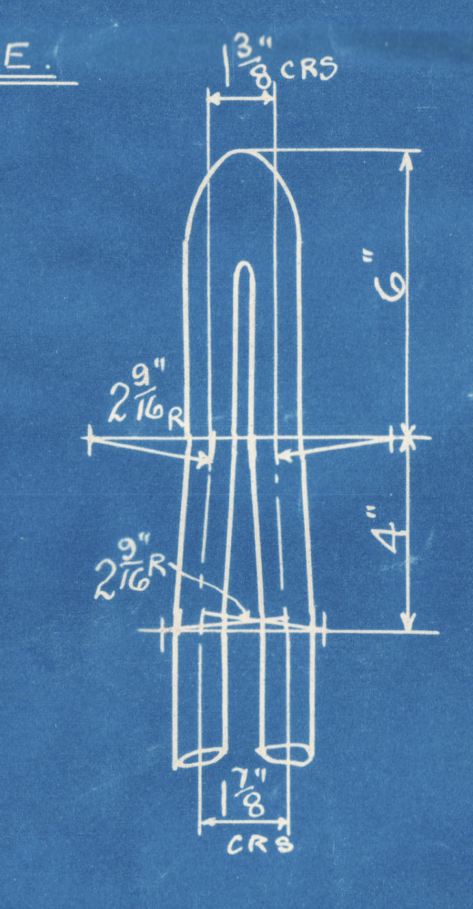
1 3/8" CRS
6"
4"
2 9/16" R
1 7/8" CRS

DETAIL OF SET ON FORGED RETURN ENDS.

At Top - Pipes. X & 3 - 4 & 5 - 6 & 7.
At Bottom - Pipes 8 & 9 - Y & 10.

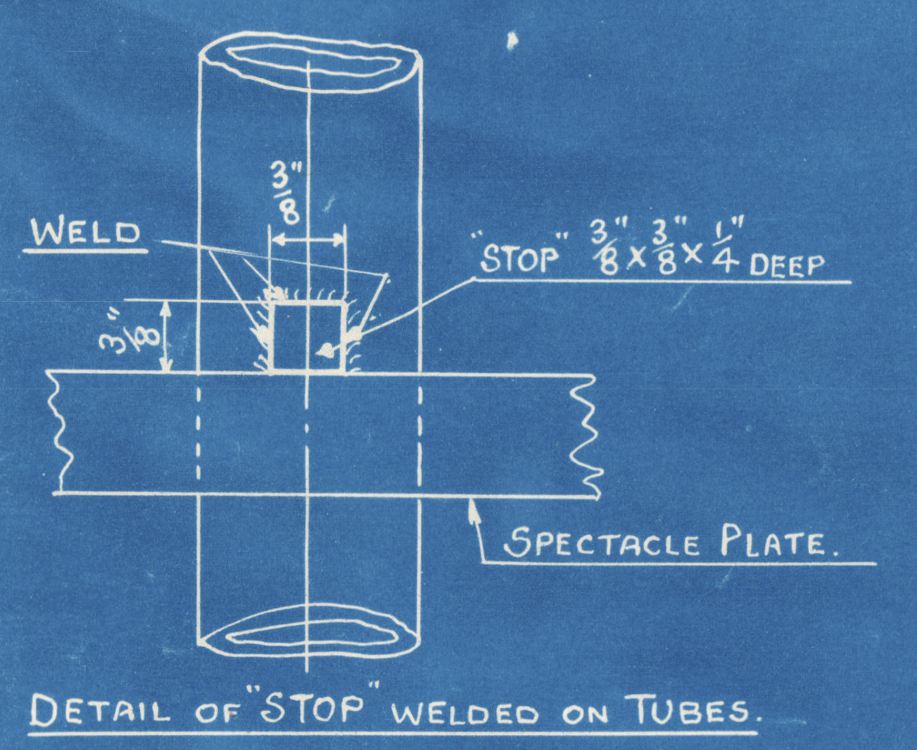
WELD
"STOP" 3/8" x 3/8" x 1/4" DEEP
SPECTACLE PLATE.

DETAIL OF "STOP" WELDED ON TUBES.

FULL SIZE.

LIST OF MATERIAL FOR ONE BOILER.

MARK	DESCRIPTION	No OFF PER-SET	MATERIAL	PIPE LENGTHS BEFORE BENDING OR FORGING.								
				PIPE X	PIPE Y	PIPE 3	PIPE 4	PIPE 5	PIPE 6	PIPE 7	PIPE 8	PIPES 9 & 10
A	ELEMENT	8	S.D.S.	7'-9 1/4"	4'-8"	6'-2 1/2"	5'-9 1/2"	5'-11 3/4"	5'-6 3/4"	5'-4 1/4"	2'-3 3/4"	2'-6 1/4"
B	" "	6	"	" "	" "	" "	" "	" "	" "	" "	" "	" "
C	" "	2	"	7'-5 1/2"	4'-6 1/4"	6'-1 1/2"	5'-8 1/2"	5'-11 3/4"	5'-6 3/4"	5'-3 1/4"	2'-2 3/4"	2'-6 1/4"
D	" "	2	"	" "	" "	" "	" "	" "	" "	" "	" "	" "
	SPECTACLE PLATE No 1	18	H.R.S	DRG No 9024/62								
	" " No 2	10	HRS	" " "								
	" " No 3	8	HRS	" " "								
	COUPLING NUTS	36	MS	" " ME 390								
	CAP ENDS	72	MS	" " MB 10360								
	STOPS WELDED ON ELTS	180	STEEL	WORKS STOCK								
	ELEMENT HANGER	18	HRS	DRG No 9024/52								

PIPE ALLOWANCE INCLUDED IN ABOVE LENGTHS.
FORGING MALE END = 2 3/4"
" RETURN END = 1 1/4"

		THE SUPERHEATER Co. LTD		
		TITLE **ELEMENTS**		
ORDER No'S		REF	CKD	DRAWING No'S
	15053 M	15053 M	~~[illegible]~~ 12/12/41	MB 14600

S.S. "ST MARGARET."

Brs ~~Off~~ rept No 15031~~4~~

CAW. 13.1.42.

THE SUPERHEATER CO. LTD.
8 JAN 1942
BOWDON, ALTRINCHAM, CHESHIRE

LONDON COPY.

SCALE	
3" = 1'-0" & FULL SIZE	
DWN	TCD
[illegible] Oliver	12/12/41

W116-0197

LONDON COPY.

CASTINGS TO BE ROUGH MACHINED ON THESE (2) FACES BY MAKERS TO WITHIN 1/16" OF FINISHED SIZE
TO BE MACHINED TO FINISHED SIZE BY THE SUPERHEATER Co LTD

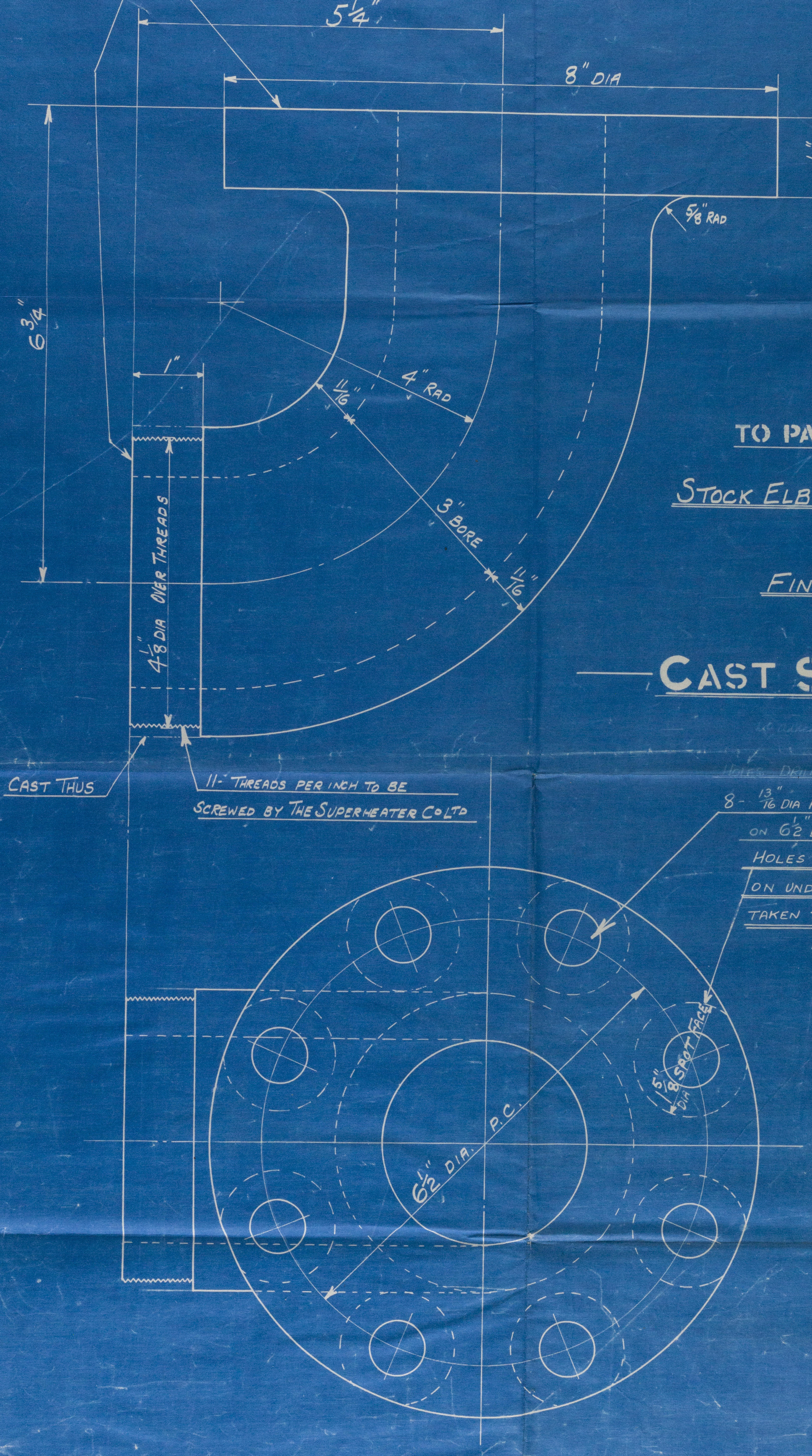

5 1/4"
8" DIA
1 1/8"
5/8" RAD
6 3/4"
1"
11/16"
4" RAD
3" BORE
11/16"
4 1/8" DIA OVER THREADS
CAST THUS
11 - THREADS PER INCH TO BE SCREWED BY THE SUPERHEATER Co LTD
6 1/2" DIA. P.C.
5/8" DIA SPOT FACE

TO PASS LLOYDS SURVEY

STOCK ELBOWS TESTED TO 660 LBS PER SQ INCH

FINISHED SIZES GIVEN

CAST STEEL

HOLES DRILLED BY THE SUPERHEATER Co LTD

8 - 13/16" DIA HOLES (DRILLED)
ON 6 1/2" DIA: P.C. (EQUALLY SPACED)
HOLES TO BE SPOT-FACED FOR 3/4" NUTS
ON UNDERSIDE OF FLANGE - AND CARE TO BE
TAKEN TO ENSURE THAT NUTS SIT SQUARE ON FLANGE.

PATTERN (DRAWING No M.L. 600) ALTERED
PATTERN No M.1430.

SCALE
FULL SIZE
DIR. ~~9/28~~ TCD ~~9/28~~
Oliver 17/7/33

THE SUPERHEATER Co LTD
BUSH HOUSE LONDON W.C.2
TITLE ELBOW (3" BORE)
REF. CKD
GEN'L USE 17/7/33
DRAWING No ML 630

S/S "St Margaret".
Brs ~~[illegible]~~ Rept No 15431.

THE SUPERHEATER CO. LTD.
8 JAN 1942
BOWDON, ALTRINCHAM, CHESHIRE

13-1-42.

LONDON COPY.

W116-0199
Lloyd's Register Foundation

REVISION			REMARKS
A	7-1-42	GOW	3/4" GAS TAPPED HOLE IN BOSS ADDED (NO PRINT SENT TO MAKER SHEWING THIS)

LONDON COPY.

CASTINGS TO BE ROUGH MACHINED ON THESE (2) FACES BY MAKERS TO WITHIN 1/16" OF FINISHED SIZE
TO BE MACHINED TO FINISHED SIZE BY THE SUPERHEATER CO LTD

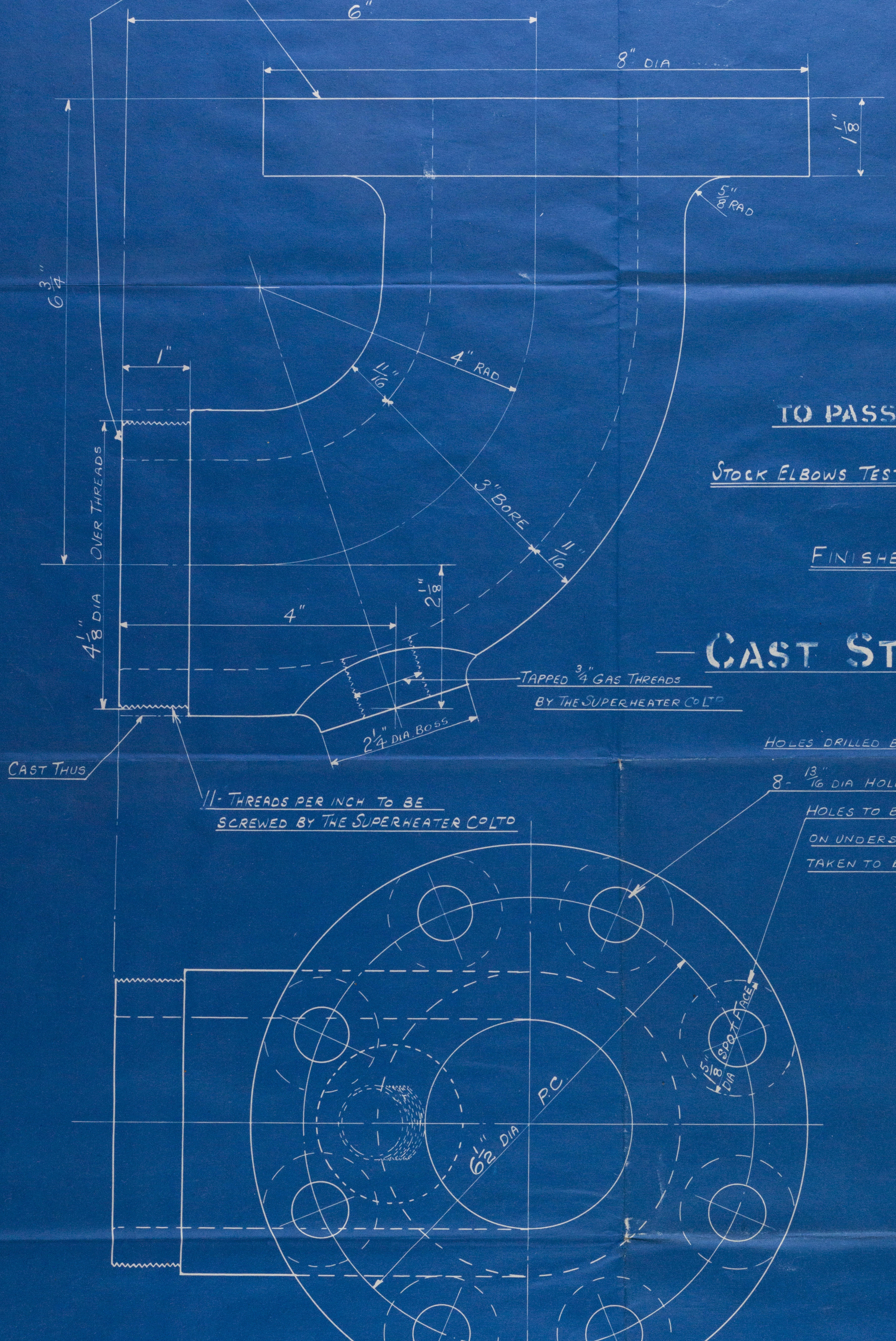
6"
8" DIA
1 1/8"
5/8" RAD
6 3/4"
1"
4" RAD
11/16"
3" BORE
11/16"
OVER THREADS
4 1/8" DIA
4"
2 1/8"
TAPPED 3/4" GAS THREADS BY THE SUPERHEATER CO LTD
2 1/4" DIA BOSS
CAST THUS
11 - THREADS PER INCH TO BE SCREWED BY THE SUPERHEATER CO LTD
1 5/8" DIA SPOT FACE
6 1/2" DIA P.C.

TO PASS LLOYDS SURVEY

STOCK ELBOWS TESTED TO 660 LBS PER SQ INCH.

FINISHED SIZES GIVEN.

CAST STEEL

HOLES DRILLED BY THE SUPERHEATER CO LTD

8 - 13/16" DIA HOLES ON 6 1/2" DIA P.C. (EQUALLY SPACED)
HOLES TO BE SPOT FACED FOR 3/4" NUTS
ON UNDERSIDE OF FLANGE. - AND CARE TO BE
TAKEN TO ENSURE THAT NUTS SIT SQUARE ON FLANGE.

PATTERN No M.1430
(MODIFIED)

SCALE	
FULL SIZE	
DWN	TCD GOW
Woolman	7/1/42

THE SUPERHEATER Co LTD

TITLE ELBOW (3" BORE)

	REF	CKD		DRAWING Nos
FIRST ISSUE	15053M	GOW 7-1-42		M.L.1150A

S/S "St. Margaret"
~~[illegible]~~ Brs repl- No 15031

GAW
13-1-42

THE SUPERHEATER CO. LTD.
8 JAN 1942
BOWDON, ALTRINCHAM, CHESHIRE

W116-0200

LONDON COPY.

REVISION			REMARKS
/11	2/1/42		BYE PASS LOOP ON HEADERS NOT NOW REQUIRED

LONDON COPY.

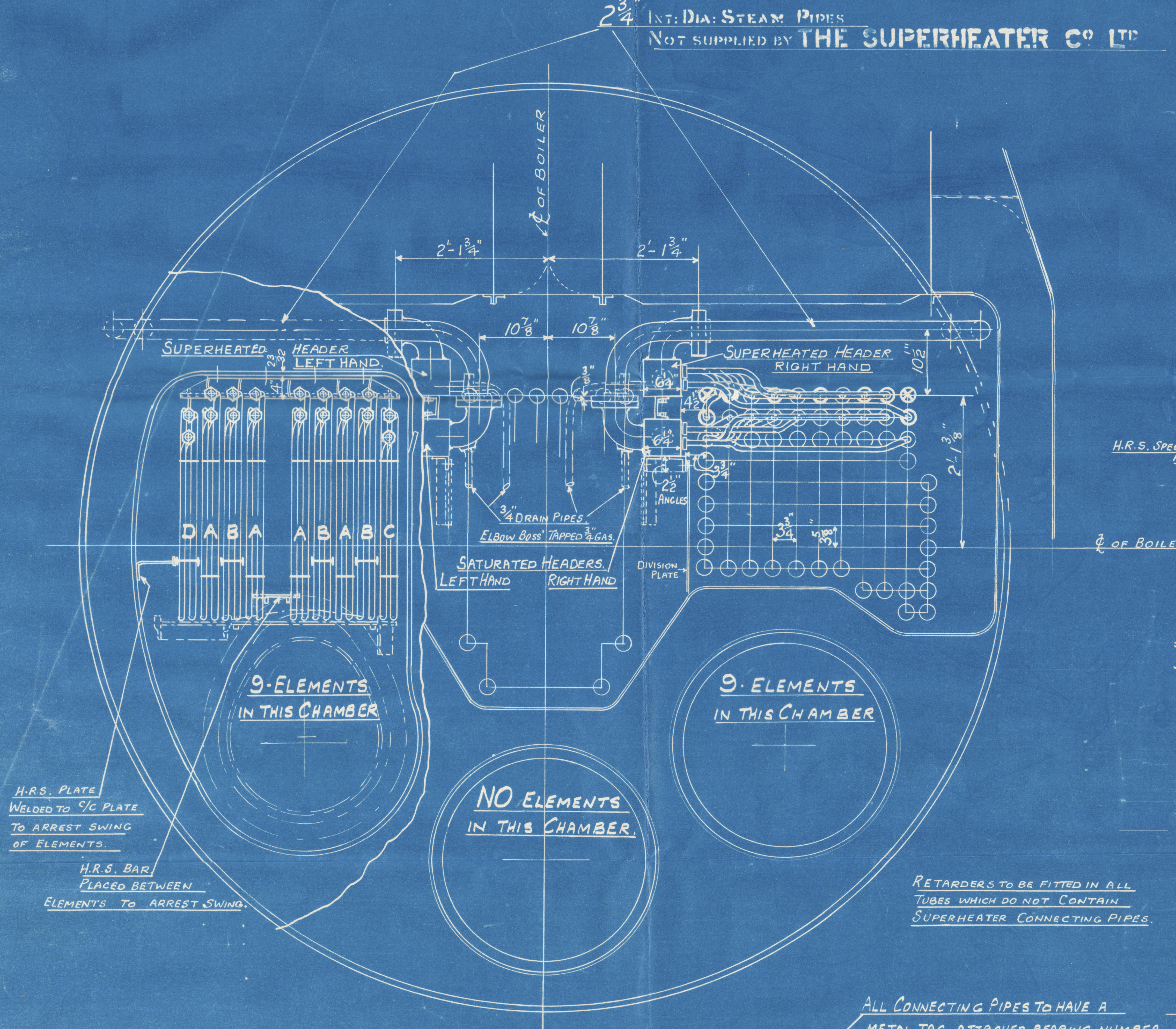
2¾" INT: DIA: STEAM PIPES
NOT SUPPLIED BY THE SUPERHEATER Cº Lᵀᴰ
℄ OF BOILER
2'-1¾"
2'-1¾"
10⅞"
10⅞"
SUPERHEATED HEADER LEFT HAND
SUPERHEATED HEADER RIGHT HAND
10½"
2'-1⅜"
6¼"
6¼"
4½"
2½" ANGLES
¾" DRAIN PIPES
ELBOW BOSS' TAPPED ¾ GAS.
SATURATED HEADERS.
LEFT HAND
RIGHT HAND
DIVISION PLATE
D A B A A B A B C
9-ELEMENTS IN THIS CHAMBER
9-ELEMENTS IN THIS CHAMBER
NO ELEMENTS IN THIS CHAMBER
H.R.S. PLATE WELDED TO C/C PLATE TO ARREST SWING OF ELEMENTS.
H.R.S. BAR PLACED BETWEEN ELEMENTS TO ARREST SWING.
RETARDERS TO BE FITTED IN ALL TUBES WHICH DO NOT CONTAIN SUPERHEATER CONNECTING PIPES.

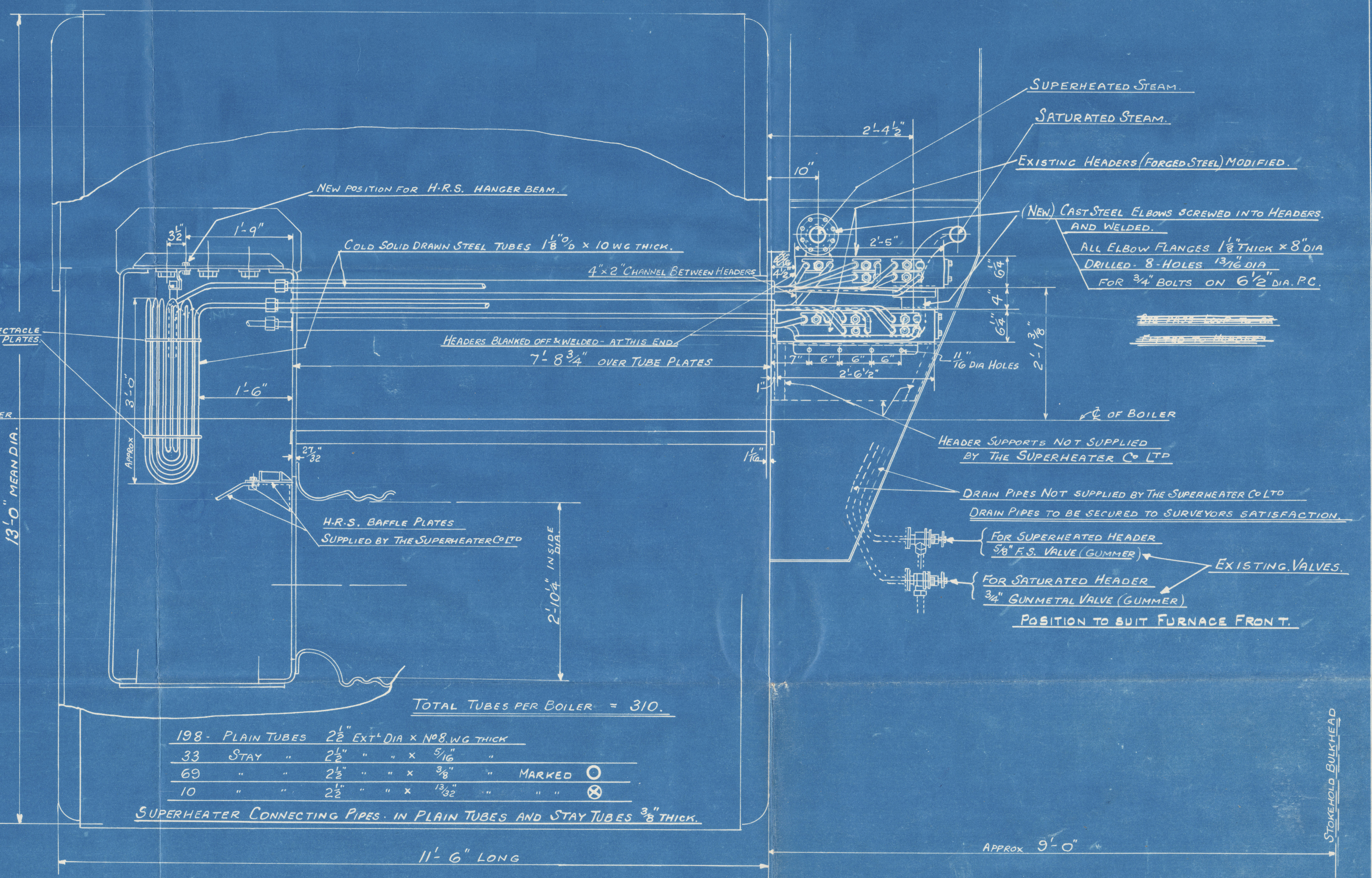
13'-0" MEAN DIA.
℄ OF BOILER
NEW POSITION FOR H.R.S. HANGER BEAM.
3½"
1'-9"
COLD SOLID DRAWN STEEL TUBES 1⅛" O/D × 10 WG THICK.
4"×2" CHANNEL BETWEEN HEADERS
H.R.S. SPECTACLE PLATES.
HEADERS BLANKED OFF & WELDED - AT THIS END.
7'-8¾" OVER TUBE PLATES
1'-6"
3'-0" APPROX
27/32"
1 1/16"
1"
H.R.S. BAFFLE PLATES
SUPPLIED BY THE SUPERHEATER Co Ltd
2'-10¼" INSIDE DIA.
11'-6" LONG
APPROX 9'-0"
STOKEHOLD BULKHEAD
SUPERHEATED STEAM.
SATURATED STEAM.
2'-4½"
10"
2'-5"
EXISTING HEADERS (FORGED STEEL) MODIFIED.
(NEW) CAST STEEL ELBOWS SCREWED INTO HEADERS. AND WELDED.
ALL ELBOW FLANGES 1⅛" THICK × 8" DIA
DRILLED - 8-HOLES 13/16" DIA
FOR ¾" BOLTS ON 6½" DIA. P.C.
6¼"
4"
6¼"
2'-1⅜"
7" 6" 6" 6"
2'-6½"
11/16" DIA HOLES
HEADER SUPPORTS NOT SUPPLIED BY THE SUPERHEATER Co Ltd
DRAIN PIPES NOT SUPPLIED BY THE SUPERHEATER Co Ltd
DRAIN PIPES TO BE SECURED TO SURVEYORS SATISFACTION.
FOR SUPERHEATED HEADER ⅝" F.S. VALVE (GUMMER)
FOR SATURATED HEADER ¾" GUNMETAL VALVE (GUMMER)
EXISTING VALVES.
POSITION TO SUIT FURNACE FRONT.

~~BYE PASS LOOP TO BE FITTED TO HEADER~~

TOTAL TUBES PER BOILER = 310.

198 -	PLAIN TUBES	2½" EXTᴸ DIA × Nº 8. WG THICK					
33	STAY "	2½"	" " ×	5/16"	"		
69	" "	2½"	" " ×	⅜"	"	MARKED	○
10	" "	2½"	" " ×	13/32"	"	" "	⊗

SUPERHEATER CONNECTING PIPES. IN PLAIN TUBES AND STAY TUBES ⅜" THICK.

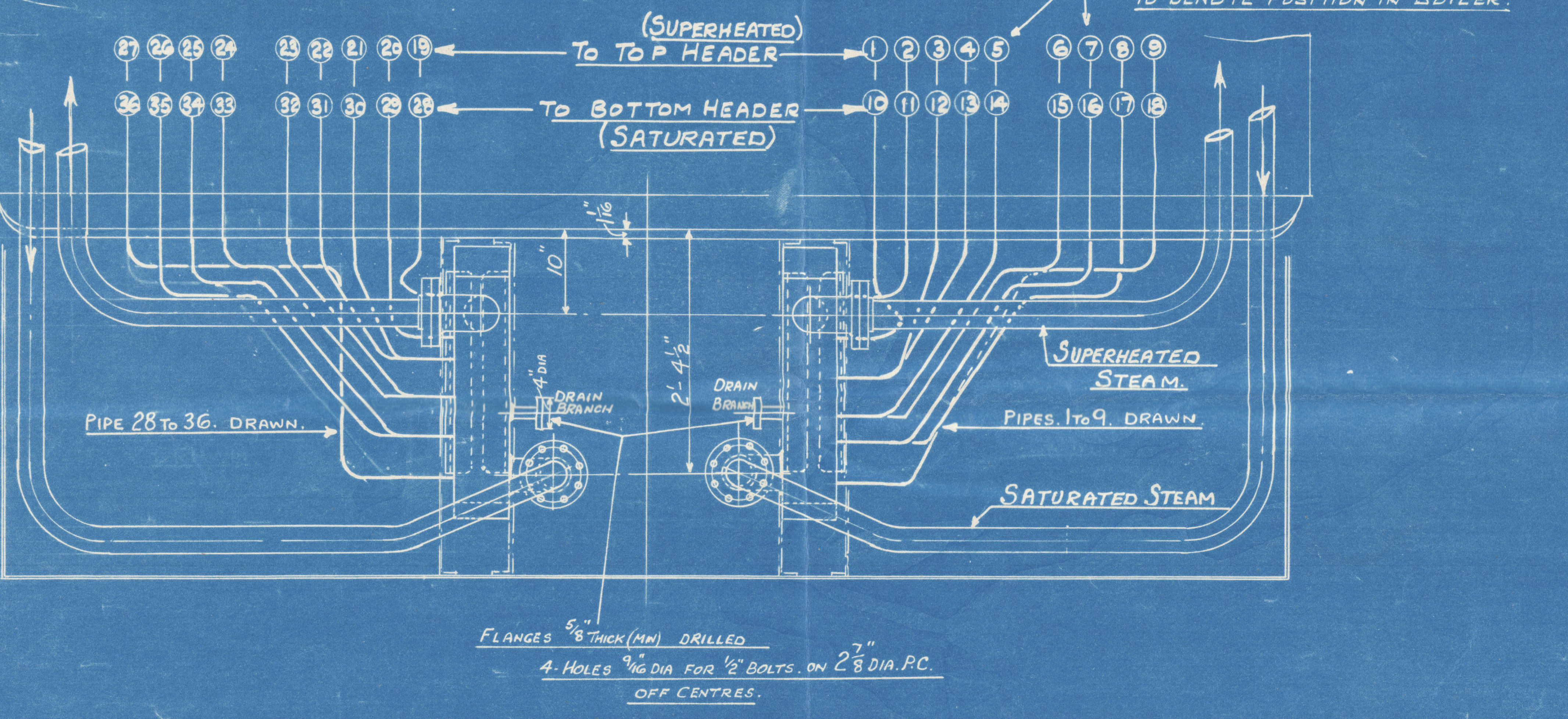
ALL CONNECTING PIPES TO HAVE A METAL TAG ATTACHED BEARING NUMBER TO DENOTE POSITION IN BOILER.
(SUPERHEATED)
TO TOP HEADER
27 26 25 24 23 22 21 20 19
1 2 3 4 5 6 7 8 9
TO BOTTOM HEADER
(SATURATED)
36 35 34 33 32 31 30 29 28
10 11 12 13 14 15 16 17 18
1/16"
10"
2'-4½"
¾" DIA DRAIN BRANCH
DRAIN BRANCH
PIPE 28 TO 36. DRAWN.
PIPES. 1 TO 9. DRAWN.
SUPERHEATED STEAM.
SATURATED STEAM
FLANGES ⅝" THICK (MIN) DRILLED 4-HOLES 9/16" DIA FOR ½" BOLTS. ON 2⅞" DIA. P.C. OFF CENTRES.

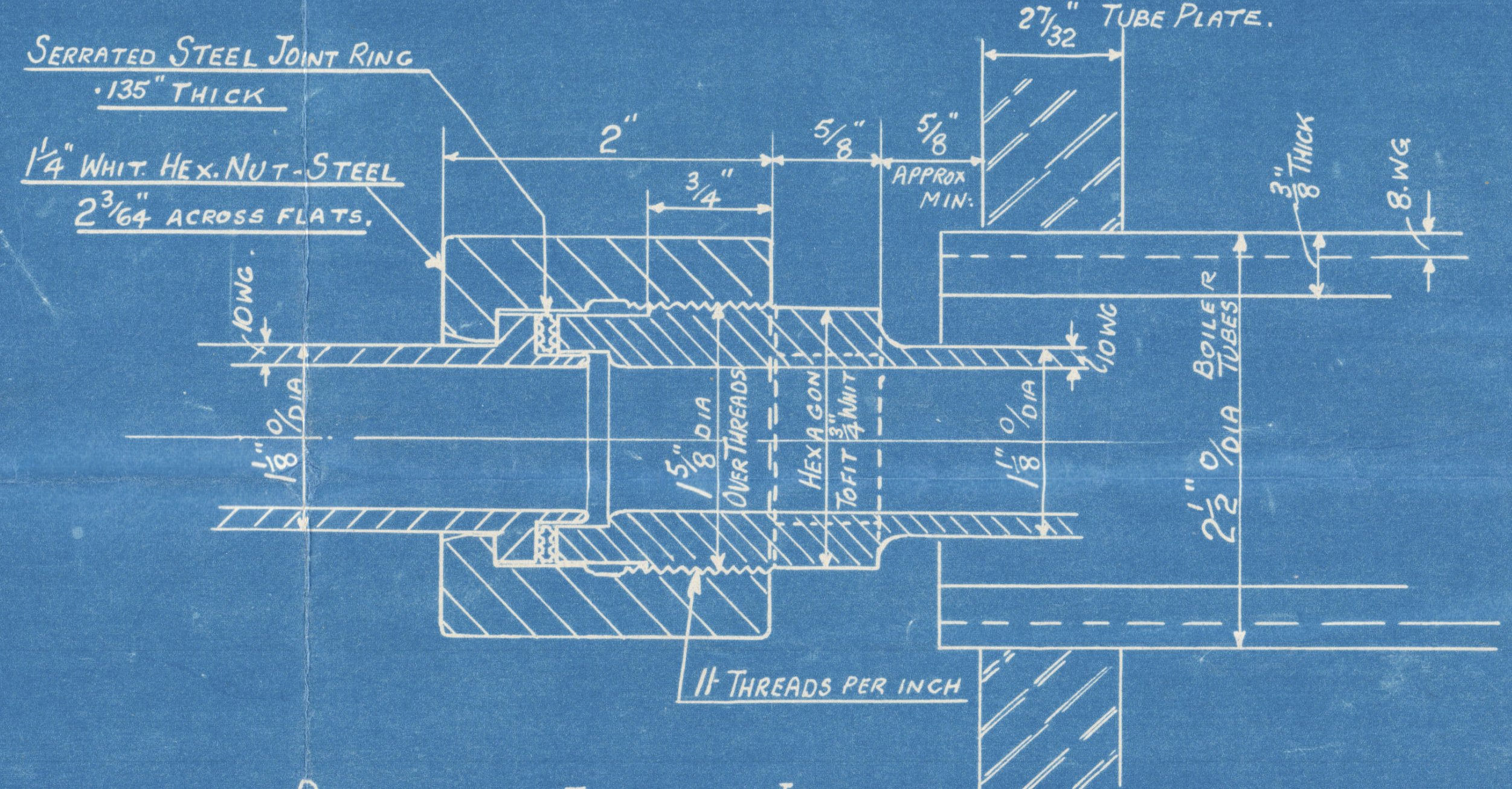
SERRATED STEEL JOINT RING ·135" THICK
1¼" WHIT. HEX. NUT - STEEL 2 3/64" ACROSS FLATS.
2"
¾"
⅝"
⅝" APPROX MIN:
2 7/32" TUBE PLATE.
⅜" THICK
8. WG
10 WG.
1⅛" O/DIA
1⅝" DIA OVER THREADS
HEXAGON TO FIT ¾" WHIT
1⅛" O/DIA
10 WG
2½" O/DIA BOILER TUBES
11 THREADS PER INCH

—DETAILS OF ELEMENT JOINT.—
- IN COMBUSTION CHAMBER.
FULL SIZE.

NUMBER OF BOILERS 2 PER SHIP (FORCED DRAUGHT - COAL FIRED)

	PER BOILER		PER SHIP 2-BOILERS
WORKING PRESSURE =	230 LBS PER □"		
GRATE AREA	=	=	
HEATING SURFACE	= 1890 ☐'	=	3780 ☐'

TO PASS LLOYDS SURVEY

TEST PRESSURE 690 LBS PER □"

PARTICULARS OF ORIGINAL HEADERS. SHOWN ON DRG Nº 9024/12.

MODIFICATIONS TO HEADERS FOR THIS ARRANGEMENT ENTAILS REMOVING FLANGED INLET & OUTLET BRANCHES AND SECURING WELDING IN BLANK PLUGS, ALSO FITTING ELBOW BRANCH TO EACH HEADER.
A CHANNEL BAR 4"×2" TO BE FITTED SECURING HEADERS TOGETHER.
SUPERHEATED HEADER TO BE FITTED WITH ¾" DRAIN BRANCH.

THE DESIGN SHOWN ON THIS DRAWING
IS PROTECTED BY PATENTS
OWNED AND CONTROLLED BY
THE SUPERHEATER Cº Lᵀᴰ

TITLE MODIFIED ARRGT OF SUPERHEATER COMBUSTION CHAMBER · TYPE.

REF	CKD	DRAWING Nºˢ
15053 M	17/12/41	15053/~~10~~11

S.S. "Sᵀ MARGARET.

13.1.42.

Brs ~~#~~ rept No. 15931 [illegible]

THE SUPERHEATER CO. LTD.
8 JAN 1942
BOWDON, ALTRINGHAM, CHESHIRE.

LONDON COPY.

SCALE	
1" = ONE FOOT	
DWN	TCD
16/12/41	

W116-0201